NTIS #PB96-153077

SSC-387

GUIDELINE FOR EVALUATION OF FINITE ELEMENTS AND RESULTS

19960603 010

This document has been approved
for public release and sale; its
distribution is unlimited

SHIP STRUCTURE COMMITTEE

1996

DTIC QUALITY INSPECTED 1

SHIP STRUCTURECOMMITTEE

The SHIP STRUCTURE COMMITTEE is constituted to prosecute a research program to improve the hull structures of ships and other marine structures by an extension of knowledge pertaining to design, materials, and methods of construction.

RADM J. C. Card, USCG (Chairman)
Chief, Office of Marine Safety, Security and Environmental Protection
U. S. Coast Guard

Mr. Thomas H. Peirce
Marine Research and Development Coordinator
Transportation Development Center
Transport Canada

Mr. Edwin B. Schimler
Associate Administrator for Shipbuilding and Technology Development
Maritime Administration

Dr. Donald Liu
Senior Vice President
American Bureau of Shipping

Mr. Robert McCarthy
Director, Survivability and Structural Integrity Group (SEA O3P)
Naval Sea Systems Command

Mr. Thomas Connors
Acting Director of Engineering (N7)
Military Sealift Command

Dr. Ross Grahm
Head, Hydronautics Section
Defence Research Establishment-Atlantic

EXECUTIVE DIRECTOR

CDR Stephen E. Sharpe, USCG
U. S. Coast Guard

CONTRACTING OFFICER TECHNICAL REPRESENTATIVE

Mr. William J. Siekierka
Naval Sea Systems Command

SHIP STRUCTURESUBCOMMITTEE

The SHIP STRUCTURE SUBCOMMITTEE acts for the Ship Structure Committee on technical matters by providing technical coordination for determinating the goals and objectives of the program and by evaluating and interpreting the results in terms of structural design, construction, and operation.

MILITARY SEALIFT COMMAND

Mr. Robert E. Van Jones (Chairman)
Mr. Rickard A. Anderson
Mr. Michael W. Touma
Mr. Jeffrey E. Beach

MARITIME ADMINISTRATION

Mr. Frederick Seibold
Mr. Richard P. Voelker
Mr. Chao H. Lin
Dr. Walter M. Maclean

U. S. COAST GUARD

CAPT George Wright
Mr. Walter Lincoln
Mr. Rubin Sheinberg

AMERICAN BUREAU OF SHIPPING

Mr. Glenn Ashe
Mr. John F. Conlon
Mr. Phillip G. Rynn
Mr. William Hanzelek

NAVAL SEA SYSTEMS COMMAND

Mr. W. Thomas Packard
Mr. Charles L. Null
Mr. Edward Kadala
Mr. Allen H. Engle

TRANSPORT CANADA

Mr. John Grinstead
Mr. Ian Bayly
Mr. David L. Stocks
Mr. Peter Timonin

DEFENCE RESEARCH ESTABLISHMENT ATLANTIC

Dr. Neil Pegg
LCDR Stephen Gibson
Dr. Roger Hollingshead
Mr. John Porter

SHIP STRUCTURE SUBCOMMITTEE LIAISON MEMBERS

SOCIETY OF NAVAL ARCHITECTS AND MARINE ENGINEERS
Dr. William Sandberg

CANADA CENTRE FOR MINERALS AND ENERGY TECHNOLOGIES
Dr. William R. Tyson

U. S. NAVAL ACADEMY
Dr. Ramswar Bhattacharyya

U. S. MERCHANT MARINE ACADEMY
Dr. C. B. Kim

U. S. COAST GUARD ACADEMY
LCDR Bruce R. Mustain

U. S. TECHNICAL ADIVSORY GROUP TO THE INTERNATIONAL STANDARDS ORGANIZATION
CAPT Charles Piersall

NATIONAL ACADEMY OF SCIENCES - MARINE BOARD
Dr. Robert Sielski

NATIONAL ACADEMY OF SCIENCES - COMMITTEE ON MARINE STRUCTURES
Dr. John Landes

WELDING RESEARCH COUNCIL
Dr. Martin Prager

AMERICAN IRON AND STEEL INSTITUTE
Mr. Alexander D. Wilson

OFFICE OF NAVAL RESEARCH
Dr. Yapa D. S. Rajapaske

MASSACHUSETTS INSTITUTE OF TECHNOLOGY

CAPT Alan J. Brown

STUDENT MEMBER
Mr. Jason Miller
Massachusetts Institute of Technology

DISCLAIMER NOTICE

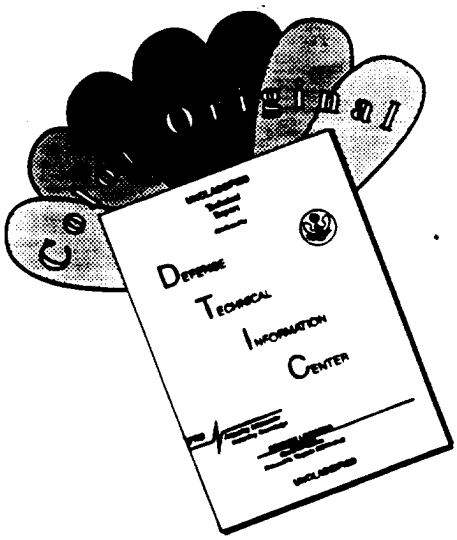

THIS DOCUMENT IS BEST QUALITY AVAILABLE. THE COPY FURNISHED TO DTIC CONTAINED A SIGNIFICANT NUMBER OF COLOR PAGES WHICH DO NOT REPRODUCE LEGIBLY ON BLACK AND WHITE MICROFICHE.

SHIP STRUCTURECOMMITTEE

The SHIP STRUCTURE COMMITTEE is constituted to prosecute a research program to improve the hull structures of ships and other marine structures by an extension of knowledge pertaining to design, materials, and methods of construction.

RADM J. C. Card, USCG (Chairman)
Chief, Office of Marine Safety, Security and Environmental Protection
U. S. Coast Guard

Mr. Thomas H. Peirce
Marine Research and Development Coordinator
Transportation Development Center
Transport Canada

Mr. Edwin B. Schimler
Associate Administrator for Shipbuilding and Technology Development
Maritime Administration

Dr. Donald Liu
Senior Vice President
American Bureau of Shipping

Mr. Robert McCarthy
Director, Survivability and Structural Integrity Group (SEA O3P)
Naval Sea Systems Command

Mr. Thomas Connors
Acting Director of Engineering (N7)
Military Sealift Command

Dr. Ross Grahm
Head, Hydronautics Section
Defence Research Establishment-Atlantic

EXECUTIVE DIRECTOR

CDR Stephen E. Sharpe, USCG
U. S. Coast Guard

CONTRACTING OFFICER TECHNICAL REPRESENTATIVE

Mr. William J. Siekierka
Naval Sea Systems Command

SHIP STRUCTURESUBCOMMITTEE

The SHIP STRUCTURE SUBCOMMITTEE acts for the Ship Structure Committee on technical matters by providing technical coordination for determinating the goals and objectives of the program and by evaluating and interpreting the results in terms of structural design, construction, and operation.

MILITARY SEALIFT COMMAND

Mr. Robert E. Van Jones (Chairman)
Mr. Rickard A. Anderson
Mr. Michael W. Touma
Mr. Jeffrey E. Beach

MARITIME ADMINISTRATION

Mr. Frederick Seibold
Mr. Richard P. Voelker
Mr. Chao H. Lin
Dr. Walter M. Maclean

U. S. COAST GUARD

CAPT George Wright
Mr. Walter Lincoln
Mr. Rubin Sheinberg

AMERICAN BUREAU OF SHIPPING

Mr. Glenn Ashe
Mr. John F. Conlon
Mr. Phillip G. Rynn
Mr. William Hanzelek

NAVAL SEA SYSTEMS COMMAND

Mr. W. Thomas Packard
Mr. Charles L. Null
Mr. Edward Kadala
Mr. Allen H. Engle

TRANSPORT CANADA

Mr. John Grinstead
Mr. Ian Bayly
Mr. David L. Stocks
Mr. Peter Timonin

DEFENCE RESEARCH ESTABLISHMENT ATLANTIC

Dr. Neil Pegg
LCDR Stephen Gibson
Dr. Roger Hollingshead
Mr. John Porter

SHIP STRUCTURE SUBCOMMITTEE LIAISON MEMBERS

SOCIETY OF NAVAL ARCHITECTS AND MARINE ENGINEERS
Dr. William Sandberg

CANADA CENTRE FOR MINERALS AND ENERGY TECHNOLOGIES
Dr. William R. Tyson

U. S. NAVAL ACADEMY
Dr. Ramswar Bhattacharyya

U. S. MERCHANT MARINE ACADEMY
Dr. C. B. Kim

U. S. COAST GUARD ACADEMY
LCDR Bruce R. Mustain

U. S. TECHNICAL ADIVSORY GROUP TO THE INTERNATIONAL STANDARDS ORGANIZATION
CAPT Charles Piersall

NATIONAL ACADEMY OF SCIENCES - MARINE BOARD
Dr. Robert Sielski

NATIONAL ACADEMY OF SCIENCES - COMMITTEE ON MARINE STRUCTURES
Dr. John Landes

WELDING RESEARCH COUNCIL
Dr. Martin Prager

AMERICAN IRON AND STEEL INSTITUTE
Mr. Alexander D. Wilson

OFFICE OF NAVAL RESEARCH
Dr. Yapa D. S. Rajapaske

MASSACHUSETTS INSTITUTE OF TECHNOLOGY

CAPT Alan J. Brown

STUDENT MEMBER
Mr. Jason Miller
Massachusetts Institute of Technology

Member Agencies:

American Bureau of Shipping
Defence Research Establishment Atlantic
Maritime Administration
Military Sealift Command
Naval Sea Systems Command
Transport Canada
United States Coast Guard

Ship Structure Committee

An Interagency Advisory Committee

Address Correspondence to:

Executive Director
Ship Structure Committee
U.S. Coast Guard (G-MMS/SSC)
2100 Second Street, S.W.
Washington, D.C. 20593-0001
Ph:(202) 267-0003
Fax:(202) 267-4816

SSC-387
SR-1364

7 March 1996

GUIDELINE FOR EVALUATION OF FINITE ELEMENTS AND RESULTS

The use of finite element analysis (FEA) techniques has grown drastically in the last decade. Several structural failures have demonstrated that, if not used properly, the FEA may mislead the designer with erroneous results. The programs have become so user friendly, that engineers with little previous design experience may use them and commit fundamental mistakes, which can result in inadequate strength in the structure.

This project intends to reduce the possibility of this human error occurring in design and analysis of ship structures. It provides, in checklists and discussions, a means to review FEA output to ensure the analysis is prepared appropriately for the intended situation. This is no substitute for solid education, enhanced by the experience of the impact of modeling choices on results. The document is to be construed as a guideline to assist the analyst and reviewer in determining deficiencies in an FEA; it is not a substitute for technical qualifications. This report supports the Coast Guard's new program for "Prevention Through People" which addresses the human error causes of marine casualties.

J. C. CARD
Rear Admiral, U.S. Coast Guard
Chairman, Ship Structure Committee

Technical Report Documentation Page

1. Report No. SSC-387	2. Government Accession No. PB96-153077	3. Recipient's Catalog No.
4. Title and Subtitle GUIDELINES FOR EVALUATION OF SHIP STRUCTURAL FINITE ELEMENT ANALYSIS		5. Report Date December 1995
		6. Performing Organization Code
7. Author(s) R.I. Basu, K.J. Kirkhope, J. Srinivasan		8. Performing Organization Report No. SR-1364
9. Performing Organization Name and Address MIL Systems Engineering 200 - 1150 Morrison Drive Ottawa, Ontario, Canada K2H 8S9		10. Work Unit No. (TRAIS)
		11. Contract or Grant No.
12. Sponsoring Agency Name and Address Ship Structure Committee US Coast Guard 2100 Second Street, SW Washington, DC, USA 20593		13. Type of Report and Period Covered Final
		14. Sponsoring Agency Code G-M

15. Supplementary Notes

Sponsored by the Ship Structure Committee and its member agencies.

16. Abstract

Finite element analysis (FEA) is the most common structural analysis tool in use today. In marine industries, the use of this technique is becoming more widespread in the design, reliability analysis and performance evaluation of ship structures. Users of FEA have considerable freedom in designing the finite element model, exercising it and interpreting the results. Key components of this process include the selection of the computer program, the determination of the loads and boundary conditions, development of the engineering model, choice of elements and the design of the mesh. A consequence of this freedom is that significant variability in FEA results can be obtained depending on the assumptions and modelling practices adopted by the analyst.

A special difficulty is faced by those who have the responsibility for assessing and approving FEAs. Unsatisfactory analysis is not always obvious and the consequences usually will not manifest themselves until the vessel is in service. The individual concerned may not be an expert in FEA, or familiar with the software package used, and will face a dilemma when coming to judge the acceptability, or otherwise, of the results of the FEA.

In response to the difficulty faced by those who evaluate FEAs, a systematic and practical methodology has been developed to assess the validity of the FEA results based on the choice of analysis procedure, type of element/s, model size, boundary conditions, load application, etc. In support of this methodology, a selection of finite element models that illustrate variations in FEA modelling practices are also presented. Benchmark tests have also been developed which can be used to evaluate the capabilities of FEA software packages to analyze several typical ship structure problems.

17. Key Words Finite Element Method, Ship Structure, Structural Analysis (Engineering), Quality Assessment		18. Distribution Statement Distribution Unlimited Available from: National Technical Information Service Springfield, VA 22161	
19. Security Classif. (of this report) Unclassified	20. Security Classification (of this page) Unclassified	21. No. of Pages 262	22. Price $36.50Paper $17.50Microfiche

Form DOT F 1700.7 (8-72) Reproduction of completed page authorized

NIST
United States Department of Commerce
Technology Administration
National Institute of Standards and Technology
Metric Program, Gaithersburg, MD 20899

METRIC CONVERSION CARD

Approximate Conversions to Metric Measures

Symbol	When You Know	Multiply by	To Find	Symbol
	LENGTH			
in	inches	2.5	centimeters	cm
ft	feet	30	centimeters	cm
yd	yards	0.9	meters	m
mi	miles	1.6	kilometers	km
	AREA			
in^2	square inches	6.5	square centimeters	cm^2
ft^2	square feet	0.09	square meters	m^2
yd^2	square yards	0.8	square meters	m^2
mi^2	square miles	2.6	square kilometers	km^2
	acres	0.4	hectares	ha
	MASS (weight)			
oz	ounces	28	grams	g
lb	pounds	0.45	kilograms	kg
	short tons (2000 lb)	0.9	metric ton	t
	VOLUME			
tsp	teaspoons	5	milliliters	mL
Tbsp	tablespoons	15	milliliters	mL
in^3	cubic inches	16	milliliters	mL
fl oz	fluid ounces	30	milliliters	mL
c	cups	0.24	liters	L
pt	pints	0.47	liters	L
qt	quarts	0.95	liters	L
gal	gallons	3.8	liters	L
ft^3	cubic feet	0.03	cubic meters	m^3
yd^3	cubic yards	0.76	cubic meters	m^3
	TEMPERATURE (exact)			
°F	degrees Fahrenheit	subtract 32, multiply by 5/9	degrees Celsius	°C

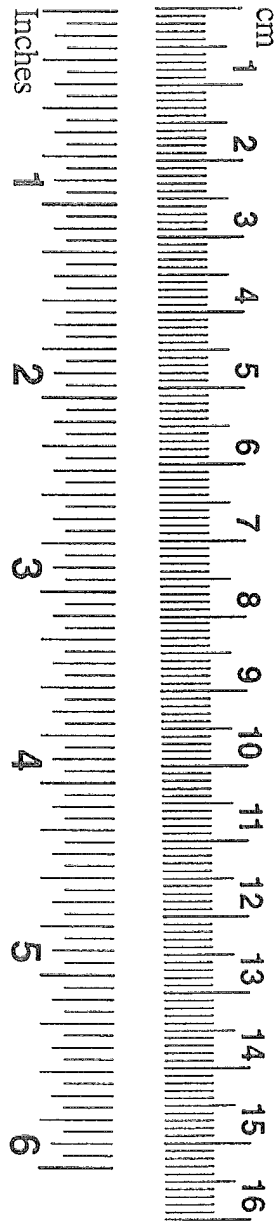

Approximate Conversions from Metric Measures

Symbol	When You Know	Multiply by	To Find	Symbol
	LENGTH			
mm	millimeters	0.04	inches	in
cm	centimeters	0.4	inches	in
m	meters	3.3	feet	ft
m	meters	1.1	yards	yd
km	kilometers	0.6	miles	mi
	AREA			
cm^2	square centimeters	0.16	square inches	in^2
m^2	square meters	1.2	square yards	yd^2
km^2	square kilometers	0.4	square miles	mi^2
ha	hectares (10,000 m^2)	2.5	acres	
	MASS (weight)			
g	grams	0.035	ounces	oz
kg	kilograms	2.2	pounds	lb
t	metric ton (1,000 kg)	1.1	short tons	
	VOLUME			
mL	milliliters	0.03	fluid ounces	fl oz
mL	milliliters	0.06	cubic inches	in^3
L	liters	2.1	pints	pt
L	liters	1.06	quarts	qt
L	liters	0.26	gallons	gal
m^3	cubic meters	35	cubic feet	ft^3
m^3	cubic meters	1.3	cubic yards	yd^3
	TEMPERATURE (exact)			
°C	degrees Celsius	multiply by 9/5, add 32	degrees Fahrenheit	°F

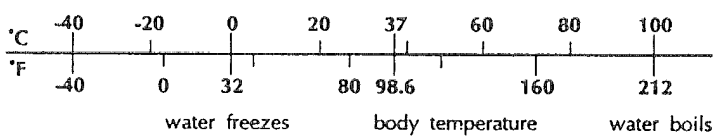

TABLE OF CONTENTS

PART 1

PROJECT OVERVIEW 1-1

1.0 INTRODUCTION 1-1
- 1.1 Background 1-1
- 1.2 Scope 1-2
- 1.3 Overview of Report 1-2
- 1.4 About the Guidelines 1-3
- 1.5 Using the Guidelines 1-3
- 1.6 The Guidelines As Quality Procedures 1-4
- 1.7 Where to Get Further Information 1-4

PART 2

ASSESSMENT METHODOLOGY FOR FINITE ELEMENT ANALYSIS 2-1

1.0 PRELIMINARY CHECKS 2-4
- 1.1 Documentation Requirements 2-4
- 1.2 Job Specification Requirements 2-5
- 1.3 Finite Element Analysis Software Requirements 2-6
- 1.4 Contractor / Personnel Qualification Requirements 2-7

2.0 ENGINEERING MODEL CHECKS 2-8
- 2.1 Analysis Type and Assumptions 2-8
- 2.2 Geometry Assumptions 2-9
- 2.3 Material Properties 2-10
- 2.4 Stiffness and Mass Properties 2-11
- 2.5 Dynamic Degrees of Freedom 2-13
- 2.6 Loads and Boundary Conditions 2-14

3.0 FINITE ELEMENT MODEL CHECKS 2-15
- 3.1 Element Types 2-15
- 3.2 Mesh Design 2-16
- 3.3 Substructures and Submodelling 2-18
- 3.4 FE Model Loads and Boundary Conditions 2-19
- 3.5 Solution Options and Procedures 2-20

4.0 FINITE ELEMENT RESULTS CHECKS 2-21
- 4.1 General Solution Checks 2-21
- 4.2 Post Processing Methods 2-22
- 4.3 Displacement Results 2-23
- 4.4 Stress Results 2-24
- 4.5 Other Results 2-25

5.0 CONCLUSIONS CHECKS 2-26
5.1 FEA Results and Acceptance Criteria 2-26
5.2 Load Assessment 2-27
5.3 Strength / Resistance Assessment 2-28
5.4 Accuracy Assessment 2-29
5.5 Overall Assessment 2-30

PART 3
GUIDELINES FOR ASSESSING FINITE ELEMENT MODELS AND RESULTS 3-1

1.0 PRELIMINARY CHECKS 3-1
1.1 Documentation Requirements 3-1
1.2 Job Specification Requirements 3-2
1.3 Finite Element Software Requirements 3-3
1.4 Reasons for Using A Particular FEA Software Package 3-4
1.5 Personnel Competence 3-4
1.5.1 Academic and Professional Qualifications 3-5
1.5.2 Training and Experience 3-5

2.0 ENGINEERING MODEL CHECKS 3-7
2.1 Analysis Type and Assumptions 3-7
2.2 Geometry Assumptions 3-8
2.3 Material Properties 3-10
2.3.1 Composite Materials 3-11
2.4 Stiffness and Mass Properties 3-12
2.4.1 Mass and Dynamic Problems 3-12
2.4.2 The Influence of Surrounding Fluid 3-13
2.5 Dynamic Degrees of Freedom 3-15
2.6 Loads and Boundary Conditions 3-16

3.0 FINITE ELEMENT MODEL CHECKS 3-18
3.1 Element Types 3-18
3.1.1 Structural Action to be Modelled 3-19
3.2 Mesh Design 3-20
3.2.1 Mesh Density 3-20
3.2.2 Element Shape Limitations 3-21
3.2.3 Mesh Transitions 3-22
3.2.4 Stiffness Ratio of Adjacent Structure 3-24
3.2.5 Miscellaneous Problems 3-25
3.3 Substructures and Submodelling 3-26
3.3.1 Substructuring 3-26
3.3.2 Static Condensation 3-27
3.3.3 Two-Stage Analysis 3-28
3.4 Loads and Boundary Conditions 3-31
3.4.1 Minimum Support Conditions 3-31
3.4.2 Boundary Conditions for Simulating Symmetry 3-32
3.4.3 Constraints 3-35
3.4.4 Loads - General 3-35

3.4.5 Loads - Nodal Force and Prescribed Displacement 3-35
3.4.6 Loads - Nodal Temperature 3-36
3.4.7 Loads - Face Pressure 3-36
3.4.8 Loads - Edge Loads 3-39
3.4.9 Loads - Thermal 3-39
3.4.10 Gravity and Acceleration 3-40
3.5 Solution Options and Procedures 3-40
3.5.1 Static Analysis 3-40
3.5.2 Dynamic Analysis 3-41
3.5.3 Buckling Analysis 3-41

4.0 FINITE ELEMENT RESULTS CHECKS 3-42
4.1 General Solution Checks 3-42
4.1.1 Errors & Warnings 3-42
4.1.2 Mass and Centre of Gravity 3-42
4.1.3 Self-Consistency 3-42
4.1.4 Static Balance 3-42
4.1.5 Defaults 3-43
4.1.6 Checklist 3-43
4.2 Postprocessing Methods 3-43
4.3 Displacement Results 3-44
4.4 Stress Results 3-44
4.4.1 Stress Components 3-45
4.4.2 Average and Peak Stresses 3-46
4.5 Other Results 3-48
4.5.1 Natural Frequencies and Modes 3-48

5.0 CONCLUSIONS CHECKS 3-50
5.1 FEA Results and Acceptance Criteria 3-50
5.2 Load Assessment 3-51
5.3 Strength/Resistance Assessment 3-51
5.4 Accuracy Assessment 3-51
5.5 Overall Assessment 3-52

PART 4
BENCHMARK PROBLEMS FOR ASSESSING FEA SOFTWARE 4-1

1.0 INTRODUCTION 4-1

2.0 THE BENCHMARK PROBLEMS 4-4
2.1 BM-1 Reinforced Deck Opening 4-4
2.2 BM-2 Stiffened Panel 4-5
2.3 BM-3 Vibration Isolation System 4-6
2.4 BM-4 Mast Structure 4-7
2.5 BM-5 Bracket Connection Detail 4-8

3.0 THE BENCHMARK TEST FEA PROGRAMS 4-9

4.0 APPLICATION OF BENCHMARKS FOR ASSESSING FEA SOFTWARE 4-9

PART 5
CONCLUSIONS AND RECOMMENDATIONS 5-1

PART 6
REFERENCES 6-1

Appendix A Evaluation Forms for Assessment of Finite Element Models and Results . . . A-1

Appendix B Example Application of Assessment Methodology B-1

Appendix C Examples of Variations in FEA Modelling Practices and Results C-1

Appendix D Ship Structure Benchmark Problems for Assessing FEA Software D-1

ACKNOWLEDGEMENTS

The authors gratefully acknowledge the contributions of Mr. Aaron Dinovitzer of Fleet Technologies Limited for his work on the ALGOR benchmarks presented in Appendix D. The authors also wish to thank Canarctic Shipping Limited, and in particular Mr. John McCallum, for permission to use the Arctic tanker example presented in Appendix B.

PART 1
PROJECT OVERVIEW

1.0 INTRODUCTION

1.1 Background

Finite element analysis (FEA) is the most common structural analysis tool in use today. Great strides have been made in theoretical and computational aspects of FEA. This has been accompanied by phenomenal advances in computer technology, both in hardware and software, together with a rapid reduction in the cost of this technology. A consequence of this is a dramatic increase in the affordability of, and accessibility to, finite element technology. In marine industries the use of this technique is becoming more widespread in the design, reliability analysis, and performance evaluation of ship structures.

Finite element analysis is a powerful and flexible engineering analysis tool which allows the analyst considerable freedom in designing the finite element model, exercising it and interpreting the results. Key components of this process include the selection of the computer program, the determination of the loads and boundary conditions, development of the mathematical model, choice of elements, and the design of the mesh. Numerous decisions are made by the analyst during this process. Results from FEAs for the same structure performed by different individuals or organizations may differ significantly as a result of differences in the assumptions and modelling procedures employed.

Unsatisfactory analysis is not always obvious and the consequences may not manifest themselves until the vessel is in service. Design changes and any structural modifications required at this stage are generally much more expensive to implement than would be the case if the deficiency was discovered earlier.

A special difficulty is faced by those who have the responsibility for assessing and approving FEAs. The individual concerned may not be an expert in FEA, or familiar with the software package used, and will face a dilemma when coming to judge the acceptability, or otherwise, of the results of the FEA. This may require the evaluator to incur further cost and time in the attempt to assure satisfactory FEA results.

In response to the difficulty faced by those who evaluate FEAs a systematic and practical methodology is required to rapidly assess the validity of the FEA results based on the choice of analysis procedure, type of element/s, model size, boundary conditions, load application etc. In support of this methodology a selection of finite element models that illustrate good modelling practice are also required. In addition benchmark tests are required to allow the validation of new FEA software packages, or packages that have undergone significant modification.

1.2 Scope

The scope of the guidelines is confined to linear elastic static and dynamic analysis of surface ship structures using FEA. The treatment of dynamic analysis is limited to natural frequency and mode calculation. The emphasis is on the structural assembly level rather than on local details, or on the total ship. Only FEA of structures composed of isotropic materials is addressed, therefore excluding fibre reinforced plastics and wood. Despite these limitations the guidelines are applicable to the vast majority of ship structure FEAs.

1.3 Overview of Report

The report is structured in six parts and four appendices as follows:

Part 1: **Project Overview**
This part introduces the document, and provides the background for the methodologies developed for assessing FEAs and FEA software which are described in subsequent Parts.

Part 2: **Assessment Methodology for Finite Element Analysis**
This part presents a systematic methodology for assessing FEAs. Appendix A contains forms that can be used for the evaluation process. Appendix B presents an example of a FEA and its evaluation.

Part 3: **Guidelines for Assessing Finite Element Models and Results**
This part provides guidance in support of the methodology presented in Part 2. It is a comprehensive description of good FEA practice. As an aid to the assessment of FEA models and results some FEAs, typical of ship structures, are presented in Appendix C. These examples are designed to illustrate the influence on the results of varying certain model parameters.

Part 4: **Benchmark Problems for Assessing FEA Software**
The assessment methodology described in Part 2 includes a requirement that suitable FEA software is used. In support of the assessment new, or significantly modified, FEA should be evaluated in regard to its suitability for ship structure FEA. The benchmark problems and results presented in Part 4 are for this purpose. The benchmark problems are presented in Appendix D.

Part 5: **Conclusions and Recommendations**
This part summarizes observations and insights gained, in the course of this project, into the process of evaluating finite element models and results, and FEA software. Also presented is a summary of where effort should be directed to further improve the methodologies in response to likely future trends in finite element technology.

Part 6: **References**

Appendix A **Evaluation Forms for Assessment of Finite Element Models and Results**

Appendix B **Example Application of Assessment Methodology**

Appendix C **Examples of Variations in Fea Modelling Practices and Results**

Appendix D **Ship Structure Benchmarks for Assessing Fea Software**

1.4 About the Guidelines

The purpose of the guidelines presented in this document is to provide a method for evaluating finite element models and results, and also FEA software.

There are many attributes to any FEA and it is difficult to assess quality unless the FEA has been comprehensively documented and a systematic assessment methodology is applied. This volume presents such a methodology.

The methodology is presented in three levels:

1. Level 1 comprises a checklist of attributes of the FEA that need to be evaluated as part of the assessment process.

2. Level 2 comprises a more detailed breakdown of the checklist provided under Level 1. Level 1 can be regarded as a summary of the Level 2 assessment.

3. Level 3 contains guidelines on acceptable finite element modelling practice. The guidelines are cross referenced with the Level 2 checklists. During the assessment process the evaluator may, if required, refer to Level 3 guidelines for advice.

For simple FEAs, an experienced evaluator can probably perform the assessment without referring to Level 2 checklists. The methodology is structured to allow the evaluator to apply the methodology at the appropriate level of detail. The reader is referred to Figure 2-1.1 in Part 2 for a graphical overview of the methodology.

In addition to presenting an assessment methodology and supporting material, this report presents benchmark problems for assessing the quality of the FEA software and its suitability for ship structural analysis.

1.5 Using the Guidelines

The primary audience for these guidelines is evaluators of FEAs. The guidelines assume that the evaluator is trained in ship structural analysis and design, but is not necessarily expert in FEA.

Ideally the guidelines would be provided as part of the job specifications (or statement of work, statement of requirements, etc.) to the analysts. The Level 1 and 2 guidelines could then be viewed as acceptance criteria for the work. The documentation requirements listed in the guidelines could then be used to stipulate the documentation required.

The methodology can be used for conducting reviews which could then be used to provide intermediate and final approvals. For this purpose each of the five areas of a FEA shown in Figure 2-1.1 would be treated as a phase in the project. Reviews could be held at the end of each phase, or less frequently for smaller projects. Depending on the outcome of the review, approval to proceed to the next stage could be given, or, in the case of serious deficiencies rework would be required.

Most FEAs will be iterative in character. This applies particularly to analyses performed in support of design tasks. The iterative nature also applies to certain aspects of the analysis itself. Some modelling decisions can only be validated during evaluation of the results. To facilitate this, the methodology is presented as a step-by-step process, and therefore, can accommodate iterations where necessary.

1.6 The Guidelines As Quality Procedures

The guidelines presented in this document incorporate several elements of a quality system as it pertains to FEA and, as such, could be incorporated in an organization's quality system for FEA.

The requirements for such a system have been developed under the direction of the National Agency for Finite Element Methods and Standards (NAFEMS) Quality Assurance Working Group. These requirements[1] are intended as a supplement to ISO (International Organization for Standardization) 9001.

1.7 Where to Get Further Information

While the information provided in the guidelines is self-contained, there may be circumstances when more detailed information is required.

There are many texts that describe FEA and theory. The reader is referred to a comprehensive bibliography[2] of books and monographs on finite element technology. Besides these texts there are several publications more suited for engineering office use. These include the following guidelines and application-oriented texts that the reader may wish to consult:

- BRAUER, J.R., *What Every Engineering Should Know About Finite Element Analysis*, Marcel Dekker, Inc., New York, 1988.

- MEYER, C. (Ed.), *Finite Element Idealization for Linear Elastic Static and Dynamic Analysis of Structures in Engineering Practice*, American Society of Civil Engineers, New York, 1987.

- NAFEMS, *Guidelines to Finite Element Practice*, National Agency for Finite

---

[1] Quality System Supplement to ISO 9001 Relating to Finite Element Analysis in the Design and Validation of Engineering Products, Ref: R0013, NAFEMS, East Kilbride, Glasgow, UK, 1990.

[2] A. K. Noor, Bibliography of books and monographs on finite element technology, Applied mechanics Review, Vol. 44, No. 6, June 1991.

Element Methods and Standards, National Engineering Laboratory, East Kilbride, Glasgow, UK, August 1984.

- STEELE, J.E., *Applied Finite Element Modelling*, Marcel Dekker, Inc., New York, 1989.

PART 2
ASSESSMENT METHODOLOGY FOR FINITE ELEMENT ANALYSIS

The methodology developed for evaluating finite element analyses of ship structures is presented in Figure 2-1.1. The evaluation is carried out at two levels conducted in parallel. The highest level (Level 1) addresses general aspects of the finite element analysis (FEA) broken down into five main areas:

1. Preliminary Checks,
2. Engineering Model Checks,
3. Finite Element Model Checks,
4. Finite Element Results Checks, and
5. Conclusions Checks.

These are identified in each of the five main boxes shown in Figure 2-1.1. Evaluation of each of these general aspects in turn requires that certain related detailed (Level 2) aspects be checked. The Level 2 aspects to be checked are listed within the main boxes and are presented in detail in separate tables that form the core of the evaluation process. The Level 2 tables contain many detailed questions regarding specific aspects of the FEA.

The way the methodology is intended to be used is described as follows. The evaluator will begin by assembling the analysis documentation and perhaps computer files of the finite element (FE) model and results. The evaluation then begins with the Preliminary Checks contained in Box 1 of Figure 2-1.1. The first of the preliminary checks involve assessment of the contents of the analysis documentation (1.1 Documentation). To perform this assessment, the evaluator refers to the table entitled *"1.1 Documentation Requirements"*. This table asks the evaluator to check that the documentation contains information that is essential for the FEA evaluation. The table also refers the evaluator to Part 3 Section 1.1 of the guideline should further explanation or guidance be necessary. If an item is contained in the documentation, the evaluator should place a check mark (✔) in the corresponding box under the *"Result"* column. If an item is not included with the documentation, the evaluator may enter a cross (X) in the result box, or "*NA*" (for Not Applicable), or *"?"* (for further information required). After checking off each item in the table, the evaluator is asked to answer Question 1.1 at the bottom of the page. The answer will be based on the evaluators assessment of each item listed in the table in Section 2-1.1. The evaluator should place the answer in the "result" box to the right of the question, and then transfer it to the corresponding "result" box in Figure 2-1.1. It is suggested that the same format of answers be used (eg. ✔, X, *NA*, or *?*). The table in Section 2-1.1also includes spaces for the evaluator to enter comments regarding specific and overall aspects of the documentation contents. At the end of the evaluation process, these comments will provide the evaluator with reminders of specific aspects of the FEA that were good, bad, or not explained well. The evaluator may refer to these comments to seek further explanation or clarification from the contractor / analyst (perhaps at a review meeting, or during a telephone conversation) before deciding on the final acceptability of the FEA.

Having completed the first of the preliminary checks, the evaluator then proceeds to the second set of checks entitled *"1.2 Job Specification Requirements"*. In a manner similar

to the previous checks, the evaluator will refer to the table in Section 2-1.2 and perform checks 1.2.1 to 1.2.7 which are aimed at verifying that the analysis covers the main requirements and objectives of the job specification (or contract, or statement of work, etc.). Based on the results of these checks, the evaluator should answer Question 1.2 and enter the result in Figure 2-1.1. This procedure is repeated for the other Preliminary Checks (i.e. 1.3 FEA Software, and 1.4 Contractor / Analyst Qualifications).

Having answered all of the Level 2 questions for *Part 1 Preliminary Checks* and entered the results into the appropriate box in Figure 2-1.1, the evaluator is then asked the question "*Preliminary checks are acceptable?*". The evaluator should check the "*Yes*" or "*No*" box below this question based on an assessment of the results of the Level 2 preliminary checks. If the answer is *"No"*, then the FEA is very likely not acceptable since it does not meet certain basic requirements. The evaluator may therefore choose to terminate the evaluation at this point. Otherwise, the answer is "*Yes*" and the FEA has passed the preliminary checks and the evaluator is instructed to proceed to the next major aspect of the evaluation, entitled "*2 - Engineering Model Checks*".

The evaluation process continues as described above for each of the five main areas identified in Figure 2-1.1. At the end of this process, the evaluator will check either the oval box entitled *"FE analysis is Acceptable"*, or the one entitled *"FE analysis is Not Acceptable"* depending on the outcome of the assessment checks.

Ideally, at the start of the job, the contractor would be given the assessment methodology as part of the job specification. This will encourage self-checking and ensure that the data provided by the contractor to the customer is complete.

A set of blank forms is provided in Appendix A. The forms are in a format that can be used in an engineering office environment. The forms are based on the forms in Part 2 with additional space provided for project information.

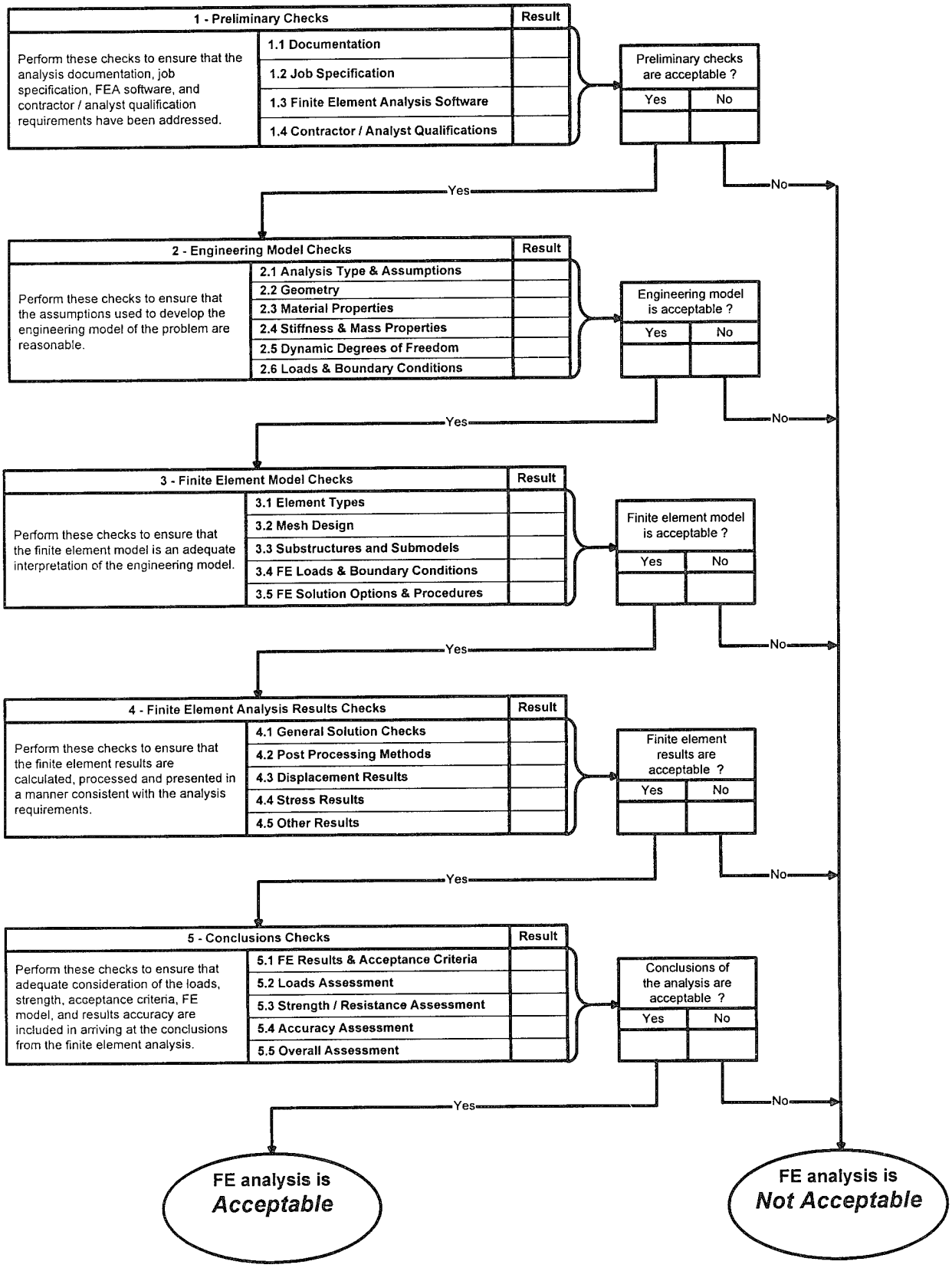

FIGURE 2-1.1 Overall Evaluation Methodology Chart

1.0 PRELIMINARY CHECKS

1.1 Documentation Requirements

In order to perform comprehensive assessment of a FEA, certain essential information must be provided in the documentation submitted.

Finite Element Analysis Assessment Check	Refer to Guideline Section	Result	Comments
1.1.1 Has the following information been provided in the FEA documentation?	3-1.1		
a) Objectives and scope of the analysis.			
b) Analysis requirements and acceptance criteria.			
c) FEA software used.			
d) Description of physical problem.			
e) Description of engineering model.			
f) Type of analysis.			
g) System of units.			
h) Coordinate axis systems.			
i) Description of FEA model.			
j) Plots of full FEA model and local details.			
k) Element types and degrees of freedom per node.			
l) Material properties.			
m) Element properties (stiffness & mass properties).			
n) FE loads and boundary conditions.			
o) Description and presentation of the FEA results.			
p) Assessment of accuracy of the FEA results.			
q) Conclusions of the analysis.			
r) List of references.			

Based on the above checks answer Question 1.1 and enter result in Figure 1.0.	*Result*
1.1 Is the level of documentation sufficient to perform an assessment of the FEA?	
Comments	

1.2 Job Specification Requirements

Perform these checks to ensure that the analysis addresses the objectives, scope, requirements and intent of the job specification (eg. contract document, work specification, statement of work, etc.).

Finite Element Assessment Check	Refer To Guideline Section	Result	Comments
1.2.1 Is the job specification identified and referenced in the analysis documentation?	3-1.2		
1.2.2 Are the objectives and scope of the analysis clearly stated and are they consistent with those of the job specification?	3-1.2		
1.2.3 Are the analysis requirements clearly stated and are they consistent with those of the job specification?	3-1.2		
1.2.4 If certain requirements of the job specification have not been addressed (such as certain load cases), has adequate justification been given?	3-1.2		
1.2.5 Are the design / acceptance criteria clearly stated and are they consistent with those of the job specification?	3-1.2		
1.2.6 Is there reasonable justification for using FEA for this problem?	3-1.2		
1.2.7 Has advantage been taken of any previous experimental, analytical, or numerical works that are relevant to this problem?	3-1.2		

Based on the above checks answer Question 1.2 and enter result in Figure 1.0.	***Result***
1.2 Does the analysis address the job specification requirements?	
Comments	

1.3 Finite Element Analysis Software Requirements

The FEA software should meet certain minimum standards to be considered acceptable for ship structural analysis applications.

Finite Element Analysis Assessment Check	Refer To Guideline Section	Result	Comments
1.3.1 Is the FEA software on the list of approved programs for ship structural analysis applications?	3-1.3		
If the answer to Check 1.3.1 is "Y", you may skip Checks 1.3.2 and 1.3.3.			
1.3.2 Are the capabilities and limitations of the FEA software used to perform the required analysis stated in the analysis documentation?	3-1.4		
1.3.3 Is evidence of this capability documented and available for review (eg. verification manual, results of ship structure FEA benchmark tests, previous approved FEA of similar problems)?	3-1.3		
1.3.4 Does the vendor of the FEA software have a quality system to ensure that appropriate standards are maintained in software development and maintenance.			

Based on the above checks answer Question 1.3 and enter result in Figure 1.0.	*Result*
1.3 Is the FEA software qualified to perform the required analysis?	
Comments	

NOTE: Part 4 of this report presents benchmark problems for the purpose of assessing the quality and suitability of FEA software for performing ship structural analysis. On its own, successful performance of the candidate FEA software in exercising the benchmark problems is not sufficient evidence of the quality and suitability of the software. The assessor should, in addition, be able to answer the other questions in the table above affirmatively.

1.4 Contractor / Personnel Qualification Requirements

The contractor and contractor personnel should possess certain minimum qualifications for performing ship structure FEA. In addition, the contractor should have a Quality Assurance (QA) system in place to ensure that proper management, administrative and checking procedures have been applied in the analysis.

Finite Element Assessment Check	Refer To Guideline Section	Result	Comments
1.4.1 Do the contractor personnel have adequate academic training and experience qualifications to perform finite element analysis?	3-1.5		
1.4.2 Do the contractor personnel have adequate engineering experience qualifications for performing ship structural design or analysis?	3-1.5		
1.4.3 Do the contractor and contractor personnel have adequate professional certification qualifications?	3-1.5		
1.4.4 Does the contractor have a working system of Quality Assurance (QA) procedures and checks that are satisfactory for the requirement?	3-1.5		
1.4.5 Do the contractor personnel have adequate experience with the FEA software used for the analysis?	3-1.5		

Based on the above checks answer Question 1.4 and enter result in Figure 1.0.	*Result*
1.4 Is the contractor adequately qualified for performing ship structure FEA?	
Comments	

2.0 ENGINEERING MODEL CHECKS

2.1 Analysis Type and Assumptions

Perform these checks to ensure that the assumptions used in developing the engineering model or idealization of the physical problem are adequate.

Finite Element Analysis Assessment Check	Refer To Guideline Section	Result	Comments
2.1.1 Does the engineering model employ enough dimensions and freedoms to describe the structural behaviour (eg. 1-D, 2-D, or 3-D)?	3-2.1		
2.1.2 Does the engineering model address the appropriate scale of response for the problem (eg. global, intermediate, or local response)?	3-2.1		
2.1.3 Is the type of analysis appropriate for the type of response and loading of interest (eg. linear, static, dynamic, buckling analysis)?	3-2.1		
2.1.4 Does the engineering model address all the required results parameters (eg. stress, displacement, frequency, buckling load)?	3-2.1		
2.1.5 Are all assumptions affecting the choice of engineering model and analysis type justified (watch for non-standard assumptions)?	3-2.1		
2.1.6 Is the level of detail, accuracy or conservatism of the engineering model appropriate for the criticality of the analysis and type of problem?	3-2.1		
2.1.7 Does the analysis employ a consistent set of units?	3-2.1		
2.1.8 Does the analysis employ a consistent global coordinate axis system?	3-2.1		

Based on the above checks answer Question 2.1 and enter result in Figure 1.0.	*Result*
2.1 Are the assumptions of the type of analysis and engineering model acceptable?	
Comments	

2.2 Geometry Assumptions

Perform the following checks to ensure that correct procedures have been followed for defining the geometric properties of the structure.

Finite Element Analysis Assessment Check	Refer To Guideline Section	Result	Comments
2.2.1 Does the extent of the model geometry capture the main structural actions, load paths, and response parameters of interest?	3-2.2		
2.2.2 Are correct assumptions used to reduce the extent of model geometry (eg. symmetry, boundary conditions at changes in stiffness)?	3-2.2		
2.2.3 Will the unmodelled structure (ie. outside the boundaries of the engineering model) have an acceptably small influence on the results?	3-2.2		
2.2.4 Are the effects of geometric simplifications (such as omitting local details, cut-outs, etc.) on the accuracy of the analysis acceptable ?	3-2.2		
2.2.5 For local detail models, have the aims of St. Venant's principle been satisfied?	3-2.2		
2.2.6 Do the dimensions defining the engineering model geometry adequately correspond to the dimensions of the structure?	3-2.2		
2.2.7 For buckling analysis, does the geometry adequately account for discontinuities and imperfections affecting buckling capacity?	3-2.2		

Based on the above checks answer Question 2.2 and enter result in Figure 1.0.	*Result*
2.2 Are the geometry assumptions in the engineering model acceptable?	
Comments	

2.3 Material Properties

Perform the following checks to ensure that correct procedures have been followed for defining the material properties of the structure.

Finite Element Analysis Assessment Check	Refer To Guideline Section	Result	Comments
2.3.1 Are all materials of structural importance to the problem accounted for in the engineering model?	3-2.3		
2.3.2 Are the assumed behaviours valid for each material (eg. linear elastic, isotropic, anisotropic, orthotropic)?	3-2.3		
2.3.3 Are the required material parameters defined for the type of analysis (eg. E, v, etc.)?	3-2.3		
2.3.4 Are orthotropic and / or layered properties defined correctly for non-isotropic materials such as wood and composites?	3-2.3		
2.3.5 Are orthotropic properties defined correctly where material orthotropy is used to simulate structural orthotropy (eg. stiffened panels)?	3-2.3		
2.3.6 If strain rate effects are expected to be significant for this problem, are they accounted for in the material properties data?	3-2.3		
2.3.7 Are the values of the materials properties data traceable to an acceptable source or reference (eg. handbook, mill certificate, coupon tests)?	3-2.3		
2.3.8 Are the units for the materials properties data consistent with the system of units adopted for other parts of the analysis?	3-2.3		

Based on the above checks answer Question 2.3 and enter result in Figure 1.0.	*Result*
2.3 Are the assumptions and data defining the material properties acceptable?	
Comments	

2.4 Stiffness and Mass Properties

Perform the following checks to ensure that correct procedures have been followed for defining the stiffness and mass properties of the structure.

Finite Element Analysis Assessment Check	Refer To Guideline Section	Result	Comments
2.4.1 Are all components that have significant effect on the stiffness of the structure accounted for in the engineering model ?	3-2.4		
2.4.2 Are the assumed stiffness behaviours valid for each structural component (eg. linear, membrane, bending, shear, torsion, etc.)?	3-2.4		
2.4.3 Are the required stiffness parameters defined for each component, eg. : Truss members - A Beams, bars - A, I_{yy}, I_{zz}, other Plates, shells - t (uniform or varying) Springs - K (axial or rotational)	3-2.4		
2.4.4 Do the section properties of stiffeners (where modelled with beams) include correct allowances for the effective plate widths?	3-2.4		
2.4.5 If torsion flexibility is expected to be important, are torsion flexibility parameters correctly defined for beam sections?	3-2.4		
2.4.6 If shear flexibility is expected to be important, are shear flexibility parameters correctly defined for beam and/or plate elements?	3-2.4		
If mass or inertial effects are not applicable to this problem, proceed to Check 2.4.13 on the following page.			
2.4.8 Are all components that have significant effect on the mass of the structure accounted for in the engineering model?	3-2.4		
2.4.9 Have material properties data for density been defined (see also Check 2.3.3)?	3-2.4		
2.4.10 Has the added mass of entrained water been adequately accounted for with structure partially or totally submerged under water?	3-2.4		
2.4.11 Are lumped mass representations of structural mass and / or equipment correctly consolidated and located?	3-2.4		
2.4.12 If rotational inertia is expected to be important, are mass moments of inertia properties correctly defined for masses?	3-2.4		

Finite Element Analysis Assessment Check	Refer To Guideline Section	Result	Comments
2.4.13 Are the values of the stiffness and mass properties data supported by acceptable calculations and / or references?	3-2.4		
2.4.14 If relevant, has fluid-structure interaction been accounted for? Has the added mass been included in the model?	3-2.4		
2.4.15 Are the units for the stiffness and mass properties data consistent with the system of units for other parts of the analysis?	3-2.4		

Based on the above checks answer Question 2.4 and enter result in Figure 1.0.	*Result*
2.4 Are the assumptions and data defining stiffness and mass properties acceptable?	
Comments	

2.5 Dynamic Degrees of Freedom

In dynamic analyses, it is often desirable or necessary to reduce the size of the problem by reducing the number of dynamic degrees of freedom (dof). Perform these checks to ensure that the correct procedures have been followed for selecting dynamic degrees of freedom.

If the analysis is not a reduced dynamic analysis, you may proceed directly to Part 2.6.

Finite Element Analysis Assessment Check	Refer To Guideline Section	Result	Comments
2.5.1 Are dynamic dof defined in enough directions to model the anticipated dynamic response behaviour of the structure?	3-2.5		
2.5.2 Are the number of dynamic dof at least three times the highest mode required (eg. if 30 modes required, need at least 90 dof)?	3-2.5		
2.5.3 Are the dynamic dof located where the highest modal displacements are anticipated?	3-2.5		
2.5.4 Are the dynamic dof located where the highest mass-to-stiffness ratios occur for the structure?	3-2.5		
2.5.5 Are dynamic dof located at points where forces or seismic inputs are to be applied for dynamic response analyses?	3-2.5		
2.5.6 Are the number of dynamic dof such that at least 90% of the structural mass is accounted for in the reduced model in each direction?	3-2.5		

Based on the above checks answer Question 2.4 and enter result in Figure 1.0.	***Result***
2.5 Are the assumptions and data defining dynamic degrees of freedom acceptable?	
Comments	

2.6 Loads and Boundary Conditions

Perform the following checks to ensure that correct procedures have been followed for defining the loads and boundary conditions of the problem.

Finite Element Analysis Assessment Check	Refer To Guideline Section	Result	Comments
2.6.1 Are all required loadings / load cases accounted for, and has sufficient justification been provided for omitting certain loadings?	3-2.6		
2.6.2 Are the loading assumptions stated clearly and are they justified?	3-2.6		
2.6.3 Has an assessment been made of the accuracy and / or conservatism of the loads?	3-2.6		
2.6.4 Are the procedures for combining loads / load cases (eg. superposition) adequately described and are they justified?	3-2.6		
2.6.5 Have the boundary conditions assumptions been stated clearly and are they justified?	3-2.6		
2.6.6 Do the boundary conditions adequately reflect the anticipated structural behaviour?	3-2.6		
2.6.7 Has an assessment been made of the accuracy of the boundary conditions, and if they provide a lower or upper bound solution?	3-2.6		

Based on the above checks answer Question 2.6 and enter result in Figure 1.0.	*Result*
2.6 Are the assumptions and data defining loads and boundary conditions reasonable?	
Comments	

3.0 FINITE ELEMENT MODEL CHECKS

3.1 Element Types

Perform these checks to ensure that the correct types of elements have been used to model the problem. To assist in this process a checklist is provided in Part 3, Section 3, paragraph 3.1.

Finite Element Analysis Assessment Check	Refer To Guideline Section	Result	Comments
3.1.1 Are all of the different types of elements used in the FEA model identified and referenced in the analysis documentation?	3-3.1		
3.1.2 Are the element types available in the FEA software used appropriate to ship structural analysis?	3-3.1		
3.1.3 Do the element types support the kind of analysis, geometry, materials, and loads that are of importance for this problem?	3-3.1		
3.1.4 If required, do the selected beam element types include capabilities to model transverse shear and / or torsional flexibility behaviour?	3-3.1		
3.1.5 If required, do the selected beam element types include capabilities to model tapered, off-set or unsymmetric section properties?	3-3.1		
3.1.6 If required, do the selected beam element types include capabilities for nodal dof end releases (eg. to model partial pinned joints)?	3-3.1		
3.1.7 If required, do the selected plate element types include capabilities to model out-of-plane loads and bending behaviour?	3-3.1		
3.1.8 If required, do the selected plate element types include capabilities to model transverse shear behaviour (ie. thick plate behaviour)?	3-3.1		
3.1.9 If the model is 2-D, are the selected element types (or options) correct for plane stress or plane strain (whichever case applies)?	3-3.1		
3.1.10 If required, can the selected element types model curved surfaces or boundaries to an acceptable level of accuracy?	3-3.1		

Based on the above checks answer Question 3.1 and enter result in Figure 1.0.	*Result*
3.1 Are the types of elements used in the FEA model acceptable?	
Comments	

3.2 Mesh Design

As the finite element method is essentially a piece-wise approximation technique, the accuracy is very largely dependant on the mesh design. Perform the following checks to ensure that the finite element mesh is acceptable.

Finite Element Analysis Assessment Check		Refer To Guideline Section	Result	Comments
3.2.1	Does the mesh design adequately reflect the geometry of the problem (eg. overall geometry, stiffener locations, details, etc.)?	3-3.2		
3.2.2	Does the mesh design adequately reflect the anticipated structural response (eg. stress gradients, deflections, mode shapes)?	3-3.2		
3.2.3	Are nodes and elements correctly located for applying loads, support and boundary constraints, and connections to other parts?	3-3.2		
3.2.4	Does the analysis documentation state or show that there are no "illegal" elements in the model (ie. no element errors or warnings)?	3-3.2		
3.2.5	Are the element shapes in the areas of interest acceptable for the types element used and degree of accuracy required?	3-3.2		
3.2.6	Are mesh transitions from coarse regions to areas of refinement acceptably gradual?	3-3.2		
3.2.7	Are element aspect ratios acceptable, particularly near and at the areas of interest?	3-3.2		
3.2.8	Are element taper or skew angles acceptable, particularly near and at the areas of interest?	3-3.2		
3.2.9	If flat shell elements are used to model curved surfaces, are the curve angles $< 10°$ for stresses, or $< 15°$ for displacement results?	3-3.2		
3.2.10	If flat shell elements are used for double or tapered curve surfaces, is warping avoided (eg. small curve angles, use of triangles)?	3-3.2		
3.2.11	Is the mesh free of unintentional gaps or cracks, overlapping or missing elements?	3-3.2		
3.2.12	Is proper node continuity maintained between adjacent elements (also continuity between beam and plate elements in stiffened panels)?	3-3.2		

Finite Element Analysis Assessment Check	Refer To Guideline Section	Result	Comments
3.2.13 Are the orientations of the beam element axes correct for the defined section properties?	3-3.2		
3.2.14 Are differences in rotational dof / moment continuity for different element types accounted for (eg. beam joining solid)?	3-3.2		
3.2.15 Are the outward normals for plate / shell elements of a surface in the same direction?	3-3.2		

Based on the above checks answer Question 3.2 and enter result in Figure 1.0.	*Result*
3.2 Is the design of the finite element mesh acceptable?	
Comments	

3.3 Substructures and Submodelling

Substructuring or submodelling techniques may be employed to reduce the size of the problem for computing and / or to take advantage of repetitive geometry in the structure. Perform the following checks to ensure that the acceptable procedures have been followed.

Finite Element Analysis Assessment Check		Refer To Guideline Section	Result	Comments
3.3.1	Is the overall substructure or submodelling scheme or procedure adequately described in the analysis documentation?	3-3.3		
3.3.2	Are all individual substructure models, global models and refined submodels identified and described in the analysis documentation?	3-3.3		
3.3.3	Are the master nodes located correctly and are the freedoms compatible for linking the substructures?	3-3.3		
3.3.4	Are the master nodes located correctly for application of loads and boundary conditions upon assembly of the overall model?	3-3.3		
3.3.5	Are loads and boundary conditions applied at the substructure level consistent with those of the overall model?	3-3.3		
3.3.6	Does the boundary of the refined submodel match the boundary of coarse elements / nodes in the global model at the region of interest?	3-3.3		
3.3.7	Is the boundary for the submodel at a region of relatively low stress gradient or sufficiently far away from the area of primary interest?	3-3.3		
3.3.8	Does the refined submodel correctly employ forces and / or displacements from the coarse model as boundary conditions?	3-3.3		
3.3.9	Does the submodel include all other loads applied to the global model (eg. surface pressure, acceleration loads, etc.)?	3-3.3		
3.3.10	Have stiffness differences between the coarse global mesh and refined submodel mesh been adequately accounted for?	3-3.3		

Based on the above checks answer Question 3.3 and enter result in Figure 1.0.	*Result*
3.3 Are the substructuring or submodelling procedures acceptable?	
Comments	

3.4 FE Model Loads and Boundary Conditions

Perform the following checks to ensure that correct procedures have been followed for defining the loads and boundary conditions of the finite element model.

Finite Element Analysis Assessment Check	Refer To Guideline Section	Result	Comments
3.4.1 Are point load forces applied at the correct node locations on the structure and are they the correct units, magnitude, and direction?	3-3.4		
3.4.2 Are distributed loads applied at the correct locations on the structure and are they the correct units, magnitude and direction?	3-3.4		
3.4.3 Are surface pressure loads applied at the correct locations on the structure and are they the correct units, magnitude and direction?	3-3.4		
3.4.4 Are translational accelerations in the correct units, and do they have the correct magnitude and direction?	3-3.4		
3.4.5 Are rotational accelerations the correct units, magnitude and direction and about the correct centre of rotation?	3-3.4		
3.4.6 Are prescribed displacements applied at the correct locations on the structure and are they the correct units, magnitude and direction.	3-3.4		
3.4.7 Are the displacement boundary conditions applied at the correct node locations?	3-3.4		

Based on the above checks answer Question 3.4 and enter result in Figure 1.0.	*Result*
3.4 Are the FE loads and boundary conditions applied correctly?	
Comments	

3.5 Solution Options and Procedures

Perform the following checks to ensure that correct solution options, techniques or procedures have been used for the finite element model.

Finite Element Analysis Assessment Check	Refer To Guideline Section	Result	Comments
3.5.1 Have any special solution options and procedures been used and, if so, have they been documented?	3-3.5		
3.5.2 If non-standard options been invoked have they been documented and the reasons for their use been explained?	3-3.5		
3.5.3 If the problem is a dynamic analysis is the method for eigenvalue and mode extraction appropriate?	3-3.5		

Based on the above checks answer Question 3.5 and enter result in Figure 1.0.	*Result*
3.5 Are the solution options and procedures followed for the FEA acceptable?	
Comments	

4.0 FINITE ELEMENT RESULTS CHECKS

4.1 General Solution Checks

Perform these checks to expose any gross errors. Most programs output values of gross parameters associated with the solution process. These parameters typically include summed applied loads and reactions, total mass, position of centre of gravity, etc.

Finite Element Analysis Assessment Check	Refer To Guideline Section	Result	Comments
4.1.1 Are all error and warning messages issued by the software reviewed and understood?	3-4.1		
4.1.2 Is the magnitude of mass of the finite element model approximately as expected?	3-4.1		
4.1.3 Is the location of centre of gravity of the model, as calculated by the program, reasonable?	3-4.1		
4.1.4 Are the applied forces in equilibrium with the applied reactions?	3-4.1		

Based on the above checks answer Question 4.1 and enter result in Figure 1.0.	*Result*
4.1 Are the general solution parameters acceptable?	
Comments	

4.2 Post Processing Methods

Perform these checks to ensure that the methods, and their limitations, used by the program to post-process the results are understood.

Finite Element Analysis Assessment Check	Refer To Guideline Section	Result	Comments
4.2.1 Are the methods for reducing analysis results described (eg. calculation of safety factors and other parameters calculated by manipulating raw output)?	3-4.2		
4.2.2 Are the methods for "correcting" FE results described (eg. correction factors, smoothing factors)?	3-4.2		

Based on the above checks answer Question 4.2 and enter result in Figure 1.0.	*Result*
4.2 Is the methodology used for post processing the results satisfactory?	
Comments	

4.3 Displacement Results

Perform these checks to ensure that the displacement results are consistent with expectations.

Finite Element Analysis Assessment Check	Refer To Guideline Section	Result	Comments
4.3.1 Are the displacement results described and discussed?	3-4.3		
4.3.2 Are plots of the deformed structure (or mode shape) presented?	3-4.3		
4.3.3 Are the directions of displacements consistent with the geometry, loading and boundary conditions?	3-4.3		
4.3.4 Do the magnitudes of displacements make sense?	3-4.3		
4.3.5 Is the deformed shape (or mode shape) smooth and continuous in area of interest?	3-4.3		
4.3.6 Are unintentional slits or cuts (indicating elements not connected where they should be) absent?	3-4.3		

Based on the above checks answer Question 4.3 and enter result in Figure 1.0.	***Result***
4.3 Are displacement results consistent with expectations?	
Comments	

4.4 Stress Results

Perform these checks to ensure that the stress results are consistent with expectations.

Finite Element Analysis Assessment Check	Refer To Guideline Section	Result	Comments
4.4.1 Are the stress results described and discussed?	3-4.4		
4.4.2 Are stress contour plots presented? In the stress plots are the stress parameters or components defined (eg. σ_x, σ_y, τ_{xy}, etc.)?	3-4.4		
4.4.3 Is the method of smoothing stress results, or averaging stress results described (eg. element stresses vs nodal average stresses)?	3-4.4		
4.4.4 Are the units of stress parameters consistent?	3-4.4		
4.4.5 Are the magnitudes of stresses consistent with intuition?	3-4.4		
4.4.6 In cases where there are adjacent plate elements with different thicknesses does the method for averaging stresses account for the differences?	3-4.4		
4.4.7 Are the stress contours smooth and continuous, particularly in region of primary interest?	3-4.4		
4.4.8 Are the stress contours at boundaries consistent with the boundary conditions applied (eg. stress contours perpendicular to boundary if symmetry bc)?	3-4.4		
4.4.9 Are stresses local to the applied loads reasonable?	3-4.4		
4.4.10 Are there areas in which stresses are above yield (which would invalidate linear elastic analysis)?	3-4.4		

Based on the above checks answer Question 4.4 and enter result in Figure 1.0.	*Result*
4.4 Are stress results consistent with expectations?	
Comments	

4.5 Other Results

Perform these checks to ensure that other types of results from the FEA are consistent with expectations.

Finite Element Analysis Assessment Check	Refer To Guideline Section	Result	Comments
4.5.1 Are the frequencies expressed in correct units?	3-4.5		
4.5.2 Are the magnitudes of natural frequencies consistent with the type of structure and mode number?	3-4.5		
4.5.3 Are the mode shapes smooth?	3-4.5		

Based on the above checks answer Question 4.5 and enter result in Figure 1.0.	*Result*
4.5 Are dynamics results consistent with expectations?	
Comments	

5.0 CONCLUSIONS CHECKS

5.1 FEA Results and Acceptance Criteria

Perform these checks to ensure that the results are in a form suitable for comparison with specified acceptance criteria.

Finite Element Analysis Assessment Check	Refer To Guideline Section	Result	Comments
5.1.1 Are the results summarised in a manner that allows comparisons with acceptance criteria, or alternative solutions or data?	3-5.1		
5.1.2 Are satisfactory explanations provided where the results do not meet acceptance criteria, or where they differ significantly from other comparable solutions or data?	3-5.1		

Based on the above checks answer Question 5.1 and enter result in Figure 1.0.	*Result*
5.1 Are the results presented in sufficient detail to allow comparison with acceptance criteria?	
Comments	

5.2 Load Assessment

Perform these checks and evaluations to ensure that the loads applied in the FEA, and their accuracy, are understood.

Finite Element Analysis Assessment Check	Refer To Guideline Section	Result	Comments
5.2.1 Has an assessment been made of the accuracy or degree of conservatism of the loads used in the FE model with respect to the following aspects :	3-5.2		
a) types of loads / load cases that were included and excluded			
b) basis or theory used to derive loads (eg. linear strip theory for sea motion loads, base acceleration vs DRS for shock, drag coefficients for wind loads, etc.)			
c) magnitudes of loads			
d) loading directions included / excluded			
e) load combinations			
f) load factors			
g) boundary conditions			

Based on the above checks answer Question 5.2 and enter result in Figure 1.0.	*Result*
5.2 Are the accuracy and conservatism, or otherwise, of the applied loading modelled understood?	
Comments	

5.3 Strength / Resistance Assessment

Perform these checks and evaluations to ensure that an adequate assessment of the capability of the structure has been made.

Finite Element Analysis Assessment Check	Refer To Guideline Section	Result	Comments
5.3.1 Has an assessment been made of the accuracy or degree of conservatism of the strength or resistance of the modelled structure with respect to the following aspects :	3-5.3		
a) failure theory, failure criteria, allowable stresses, safety factors, etc			
b) section properties			
c) material properties			
d) allowances for imperfection, misalignment, manufacturing tolerances			
e) allowances for corrosion			

Based on the above checks answer Question 5.3 and enter result in Figure 1.0.	*Result*
5.3 Has an adequate assessment been made of the capability of the structure?	
Comments	

5.4 Accuracy Assessment

The checks listed below are intended to ensure that an attempt has been made to assess the accuracy of the FEA.

Finite Element Analysis Assessment Check	Refer To Guideline Section	Result	Comments
5.4.1 Has an assessment been made of the scale of FE model and its level of detail and complexity?	3-5.4		
5.4.2 Have the types of behaviour modelled and not modelled (eg. membrane only instead of membrane plus bending) been assessed?	3-5.4		
5.4.3 Has the influence of mesh refinement on accuracy been considered?	3-5.4		
5.4.4 Has a comparison with other results (eg. other solutions, experiment, etc.) been made?	3-5.4		
5.4.5 Based on the above has an overall assessment of the accuracy of the relevant results been made?	3-5.4		

Based on the above checks answer Question 5.4 and enter result in Figure 1.0.	***Result***
5.4 Has an adequate assessment of the accuracy of the analysis been made?	
Comments	

5.5 Overall Assessment

The checks listed below are to ensure that the overall conclusions and recommendations resulting from the FEA have been presented and are generally satisfactory.

Finite Element Analysis Assessment Check	Refer To Guideline Section	Result	Comments
5.5.1 Are conclusions from the FEA provided, and are they consistent with the material presented?	3-5.5		
5.5.2 If appropriate has a way ahead or potential solutions been presented?	3-5.5		
5.5.3 Based on consideration of all previous checks is the overall assessment that the FEA is acceptable?	3-5.5		

Based on the above checks answer Question 5.5 and enter result in Figure 1.0.	*Result*
5.5 Is the finite element analysis assessed generally satisfactory?	
Comments	

PART 3
GUIDELINES FOR ASSESSING FINITE ELEMENT MODELS AND RESULTS

The guidelines recommended below are structured to match the Assessment Methodology described in Part 2. Therefore, the guidelines are grouped under the same five sections:

1. Preliminary Checks
2. Engineering Model Checks
3. Finite Element Model Checks
4. Finite Element Results Checks
5. Conclusions Checks

1.0 PRELIMINARY CHECKS

This section describes the checks that need to be undertaken to ensure that the finite element analysis (FEA) satisfies certain basic requirements. The first requirement before evaluating an FEA is to ensure that there is sufficient documentation provided with the analysis. This step should ensure the analysis addresses the objectives, scope, and requirements of the work specification. It is necessary to establish that the tools the analyst uses in the FEA are adequate and appropriate to the analysis; this applies particularly to the software used. Finally, the analyst should be appropriately trained and should have sufficient experience.

1.1 Documentation Requirements

Proper documentation is an essential part of any FEA. The documentation submitted should be sufficient to allow a through evaluation of the FEA. The complete documentation package, which can be defined as that required by an independent party to reproduce the analysis, should be available and submitted if required by the evaluator. The complete documentation would typically include:

- project data
- scope and objectives of the analysis
- list of reference documentation
- drawings and sketches of the subject structure
- description of the engineering model
- rationale for using FEA
- software and hardware used in the analysis
- description of the finite element model
- assumptions used in the analysis
- description of the results
- assessment of accuracy of the results
- conclusions and recommendations

The input and output data should be presented in graphical or textual form depending on what is the most convenient for evaluation purposes.

The documentation requirements listed in Part 2, Section 1- Para 1.1, are the minimum required. In general, any additional information considered necessary for a complete evaluation should also be provided.

Plots should be properly annotated to show the location of the subject structure in the ship (eg., frame numbers, deck numbers etc.), axes to orient the model, location of equipment supported by the structure, and the position of major structural features that define boundaries (eg. bulkheads). All symbols used in the plots should be defined either on the plots or in the body of the report.

1.2 Job Specification Requirements

The purpose of this check is to ensure that the analysis has been undertaken according to the requirements of the job specification. This can be done only if the documentation provided addresses every requirement of the job specification. It is not possible to list all such requirements, but at least the following items should be addressed:

- definition of the problem
- scope and objectives of the analysis
- all relevant documentation such as drawings, sketches and reports to completely define the subject structure and loading
- any previous analyses, service experience and experimental data related to the subject structure
- acceptance criteria (eg. allowable stress in an analysis in support of a design)

It is expected that the analyst has carefully read the job specifications and followed it as closely as possible. Deviations from the specifications, if any, should be identified and justified. All reference documents should be identified.

If the job specification does not specifically call for a FEA, then the analyst should explain the rationale for using FEA in preference to another method of structural analysis, or in preference to experiments. It is also expected that the analyst is aware of any previous related studies and their outcome.

The selection of FEA as the preferred method of structural analysis will depend on many features of the engineering problem. Features of the problem that should be discussed include, but are not limited to, the following:

- purpose of analysis;
- complexity of the structural form;
- redundancy of structural system;
- assessment of expected accuracy;
- accuracy of known input variables such as loads, material properties, etc.; and
- suitability, or otherwise, of hand calculation methods.

1.3 Finite Element Software Requirements

There are many finite element software systems on the market. Most are intended for general purpose FEAs, while others are specialist in nature. Ship structure FEA is, to a certain extent, specialized in nature and therefore not all FEA software will perform adequately. It is essential to establish that the software chosen for the job has the required capabilities. In addition it is necessary to ensure that the software has been verified and validated.

Commercial finite element analysis systems are large and complex. Developing and maintaining such systems require systematic methods to be applied to the design and development of the code, the testing, the verification and validation of the code, and the configuration management of the software system. Reputable software vendors rely on quality systems to ensure that the relevant processes that comprise the development and maintenance of the software are properly controlled. The evaluation of FEA software should include an assessment of the vendor's quality system.

There are several ways in which FEA software can be validated. The methods for validating FEA software include:

- independent analysis
- experimental results
- service experience

Many finite element software vendors publish verification examples. Generally the verification examples are based on problems with closed form solutions. The analytical results are compared with those obtained by exercising the finite element code. While a comprehensive set of satisfactory verification examples is convincing evidence of good code it does not constitute proof. Verification examples based on problems based on closed-form solutions are necessarily simple and the finite elements models are generally not too demanding on the software. It is necessary, therefore, to employ additional methods to validate the software.

An additional validation method is to use benchmark problems that, while simple, are more representative of typical structure. In contrast to the type of verification example mentioned above, benchmark problems can be designed to use combinations of element types, element shapes that vary from the ideal, complex boundary conditions, multiple load cases etc. to test the software. These problems more closely relate to the way in which the software will be used in practice.

Closed form solutions are generally not available for benchmark problems. However, results from other well-established FEA software could be regarded as an example of an independent analysis. If results from several other FEA software systems are consistent, or where any differences can be rationalized, then these results can be regarded as benchmarks. Any significant differences between benchmark results and those obtained from the candidate FEA software system would be an indication of unsatisfactory performance.

Depending on the size of the organization and the volume of FEA work, it may be useful to maintain a register of FEA software validated based on satisfactory performance using the methods outlined above. Alternatively this function could be performed by a body representative of the industry such as a professional society.

In the absence of such an arrangement at present, benchmark problems typical of ship structures have been formulated and the results documented in Part 4 of this report. These benchmark problems could be used to evaluate candidate FEA software. If the contractor has documented evidence (based on previous applications of the software to ship structural analysis problems) that the software is capable of performing the required analysis, this requirement may be waived at the discretion of the evaluator.

Successful performance of the candidate FEA software on the benchmark problems is a necessary, but not sufficient, condition for approving the software. The software should also satisfy requirements outlined in the opening paragraphs of this section particularly in regard to requirements for the vendor's quality system.

1.4 Reasons for Using A Particular FEA Software Package

It is recognized that the contractor will prefer to use FEA software packages that are readily available and that the analyst has experience with. However, the contractor should make an assessment of the suitability of the selected FEA software for the analysis under consideration. The items that should be discussed include the following:

- availability of required element types
- availability of required material types
- availability of required load types
- capability of the software to perform required analysis
- preprocessing and postprocessing capabilities
- support from vendors

1.5 Personnel Competence

The personnel performing and checking the analysis must meet minimum training and experience requirements. The following aspects of personnel background will need assessment:

- formal academic or professional qualifications
- engineering expertise in design and analysis of ship structures
- relevant experience in the modelling and analysis of design problems using the finite element method
- familiarity with, and appreciation of, the limitations of the particular software employed

Personnel are grouped in two categories: analyst and checker. The analyst is a person who undertakes the FEA. The checker performs independent checks of the analyst's work, and certifies the quality of the work.

The contractor should satisfy the client that the analyst and checker meet the competence requirements, and assure the client that sufficient resources are applied to allow the FEA to be undertaken proficiently.

1.5.1 Academic and Professional Qualifications

The analyst and the checker should be qualified to first degree level in engineering or naval architecture, and have taken at least one full course in structural FEA. Professional Engineer (or equivalent) status is essential for the checker and desirable for the analyst.

1.5.2 Training and Experience

The analyst and checker should have received training in the application of the finite element method. Either of the following is acceptable, in principle, as training:

- Training provided by various courses offered by educational establishments and software vendors. These courses are only acceptable if they are application oriented.
- In-house formal or informal training provided by a supervisor capable of satisfying the requirements of a checker. The content of the training should be at least equivalent to a one week application oriented training program. The training course/s should be documented.

The analyst or checker must be familiar with the design requirements, codes of practice, analysis and design standards relating to ship structures. The checker must have, and the analyst should preferably have, experience with analyses of comparable size and complexity as the analysis under assessment.

The checker should be an experienced analyst with substantial experience in the application of the finite element method. This experience should include working as an analyst on finite element analyses that are comparable in complexity to the analysis the checker will be verifying. The documentation should include a brief outline of previous experiences .

The experience requirements for analysts recommended by NAFEMS (NAFEMS, 1990) is summarized in Table 3-1.1. The experience required of the analyst depends on the criticality of the analysis. The criticality category depends on the consequences of failure of the structure being analyzed.

Analysis Category	Engineering Experience	FE Modelling and Problem Solving	
	Design & Analysis Experience	FE Experience After Formal Training for Each Analysis Type	Relevant Jobs Performed
1. Vital -endanger human life, or property or the environment on a scale of a public disaster	5 years	6 months	2 x Category 1 under supervision or 5 x Category 2 properly assessed
2. Important -Category 1 problem however analysis is not an exclusive part of the integrity demonstration	2 years	2 months	1 x Category 1 or 2 under supervision or 3 x Category 3 properly assessed
3. Advisory -All analysis other than the ones covered in Categories 1 and 2	1 year	1 month	Prescribed Benchmarks[1]

[1] For example, see Part 3 of this report for benchmark problems

TABLE 3-1.1 Minimum Recommended Experience Levels (adapted from NAFEMS, 1990)

2.0 ENGINEERING MODEL CHECKS

The checks recommended in this section are generic in nature, and form part of any engineering analysis. The engineering model is a simplified representation of the physical problem and hence it is crucial that this modelling process is undertaken correctly since the finite element analysis (FEA) cannot improve on a poor engineering model. The aspects covered in this section include type of analysis, problem geometry, material and physical properties, loads, and boundary conditions. The discussion here is restricted to an understanding of the physical problem. Translating these aspects into a finite element model, in a format recognized by the software program, is covered in Section 3.

2.1 Analysis Type and Assumptions

An engineering model is a simplification and idealization of an actual physical structure or component. The contractor should describe the physical problem, and should include, as a minimum, discussion of the following topics:

- general description
- purpose of analysis (eg., design, failure investigation, etc.)
- whether the problem is static or dynamic
- appropriateness of linear elastic analysis (nonlinear analysis is not addressed in this document)
- assumptions and approximations that have to be made and their likely implications
- design criteria if appropriate

The underlying assumptions and decisions made in the formulation of the finite element (FE) model should also be described. This description should include the rationale for:

- including and excluding parts of the structure
- taking advantage of symmetry, antisymmetry, or axisymmetry
- identification of dominant structural action
- whether the structure can be modelled with line elements, area elements, or volume elements or a combination of different element types

Ship structures are usually complex in nature, and can only be analyzed after idealization of the structure. Several simplifying assumptions are made in the idealization process. In order to do this successfully, it is necessary to have a reasonable qualitative understanding of the expected response. This will allow reduction of the complex response of the actual structure to its essentials. The elements that need to be considered in this idealization process are the character of loading, the primary loading paths, and the parts of the structure that participate in the response.

The loading will be static or dynamic. Many dynamic loads can be treated quasi-statically. Where this is not possible, it will be necessary to consider the frequency range over which there is significant energy in the forcing function. This will determine the number of modes to be extracted.

Consideration of the likely load paths will help establish the extent of the structure that should be modelled, and what boundary conditions might be appropriate.

Most real structures are discontinuous and irregular at a local level. For example, it is likely that there will be brackets attached to the structure, openings, access holes, etc. The explicit modelling of these features is not practicable, and not necessary if global response is of interest.

All structures are three-dimensional. Depending on the configuration it is often possible to reduce the number of dimensions to be considered.

2.2 Geometry Assumptions

One of the first questions to arise during the planning phase of a FEA is how much of the structure needs to be modelled to yield answers of the required accuracy. This is best approached by considering what the influence on the results of interest is of extending or reducing the extent of the model. If the influence is negligible then the extent of the model can be established in advance. However, performing such an exercise on complex structures through intuition alone is difficult.

It is recommended that in complex structures the main structural actions should be identified. Once the main structural actions are identified, it is possible to apply simplified structural models to guide the analyst in deciding the extent of the structure to be modelled; Figure 3-2.1 illustrates the concept with simple examples. The following general principles should be borne in mind when using this approach:

- Drastic changes in stiffness are potential regions to end the model. Figure 3-2.2 presents an example in which the left-hand side of a beam is supported by stiff structure. The bending stiffness of beams is proportional to I/L^3 where I and L are the second moment of area and the span respectively. In this example a difference in stiffness of, say, two orders of magnitude would be sufficient to justify the modelling approach shown in the figure. This general approach can be adapted for other more complex structures.
- Identification of load paths is a good indicator of which parts of the structure are best to model.

The actual extent of the finite element model depends on a tradeoff between the resources available for the analysis and the general requirement that all significant portions of the structure be modelled.

The contractor should describe and justify the extent of the model. The justification statement should include a discussion of:

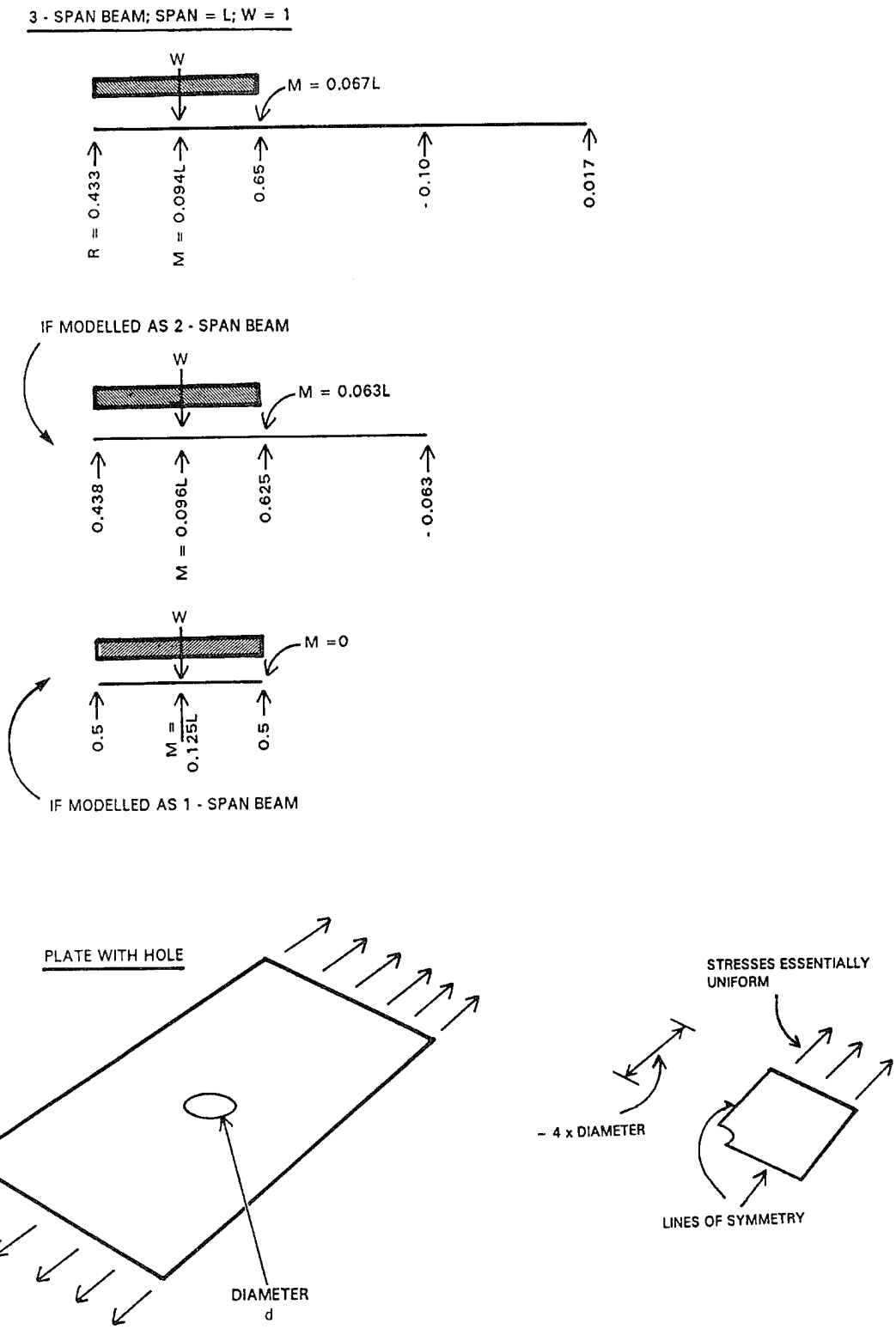

FIGURE 3-2.1 Examples of Simple Models that can Indicate Extent of Structure to be Modelled

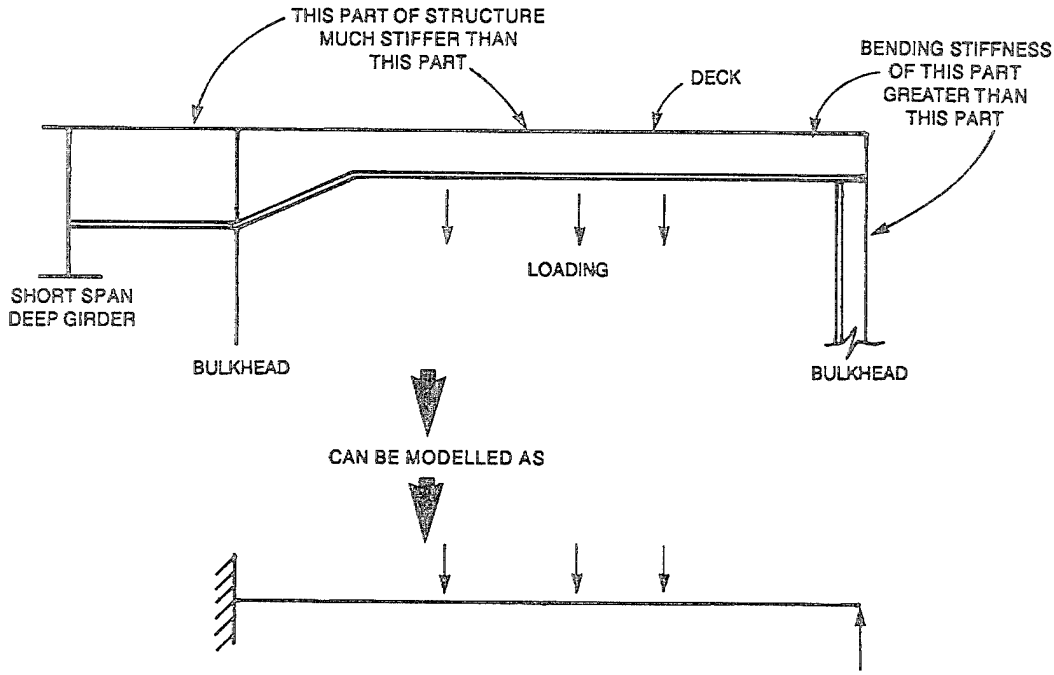

FIGURE 3-2.2 Large Changes in Stiffness to Indicate Extent of Model

- all significant structural action captured by model.
- requirement to accurately predict stresses and/or deflections.
- region of structure of particular interest.
- whether St. Venant's Principle is satisfied
- obvious changes in structural stiffness that suggest a model boundary
- very local application of the load to a large uniform structure
- for large models, can top-down analysis be used?

If the FEA is concerned primarily with local effects then the concepts underlying St. Venant's Principle can be helpful in establishing the extent of model. Essentially this principle states that the replacement of a load (which could be caused by a restraint) by a different, but statically equivalent, load causes changes in stress distribution only in regions close to the change. Figure 3-2.3 illustrates the principle.

2.3 Material Properties

The most common materials used in the construction of ships are metallic. Other materials also used include GRP and wood. The scope of these guidelines is confined to isotropic materials working in the elastic range. However, certain important considerations in modelling material properties of composite materials are discussed in the paragraphs below.

While Poisson's ratio for steel is not very sensitive to increases in temperature, Young's Modulus does reduce significantly when the temperature starts to get above a few hundred degrees Centigrade. Nuclear air blast explosions can cause thermal effects of sufficient magnitude to influence the value of Young's Modulus. High strain rates can increase the value of the yield and ultimate stresses of the material. However, these strain rates have to be very high to have a significant effect. Examples where structures may be subject to high strain rates include structural response to underwater explosions and nuclear air blast. As a general guide, the effects of strain rate should be considered for strain rates over 0.1 s^{-1}.

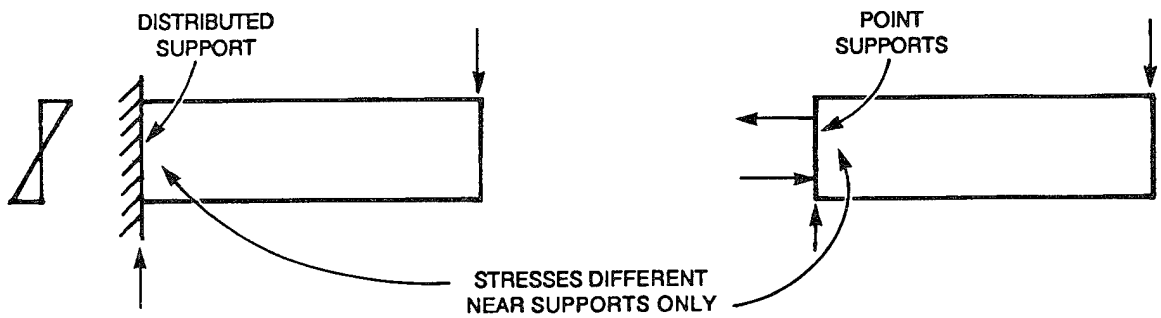

FIGURE 3-2.3 Illustration of St. Venant's Principle

2.3.1 Composite Materials

Modelling the behaviour of composite materials is more complex than modelling isotropic materials such as steel. Composite materials are anisotropic and cannot always be regarded as a continuum. In cases where global response is of interest, it may be reasonable to model composite materials using an anisotropic continuum model. More local analysis requires explicit modelling of the material.

Most general purpose FEA software systems include the capability to compute the elastic properties of composite materials. This is done by defining the individual layers that comprise the composite. Alternatively, it is often possible to input the constitutive matrices that define the relationship between generalized forces and moments to generalized strains and curvatures.

The failure modes of composite materials are also more complex than those that typically apply to isotropic materials. To check the adequacy of a structure made from composite materials, it is necessary to define the failure criteria that must be applied. Whereas with isotropic materials a single failure criterion (e.g. yield stress) is typically applied, with composite materials failure criteria are generally different for different directions and can be applied to strains, stresses and combinations of stresses and strains.

There are other modelling issues that are particular to composite materials. Depending on the design of the composite, it may not be possible to apply symmetry conditions even when the loading and the overall geometry are symmetrical about one or more axes.

2.4 Stiffness and Mass Properties

Truss elements are the simplest in form and the only physical property required is cross sectional area. Beam sections, on the other hand, are considerably more complex. The various sectional properties needed to define beam elements are discussed in the following paragraphs.

The basic sectional properties required to define beam elements are cross sectional area, shear areas in two orthogonal directions normal to the longitudinal axis of the element, torsional constant, and the second moments of area about two orthogonal axes. The axes are usually chosen to coincide with any axes of symmetry that may exist. While this definition of beam properties is complete for the vast majority of cases, there are circumstances in which additional factors need to be considered.

The torsional stiffness is based on the torsional constant alone and therefore no account is taken of warping effects. Warping is most relevant for open sections. The error introduced by ignoring warping is, fortunately, usually not serious because of the circumstances in which open sections are generally used in structures. However, in situations where the main structural force acting on an open-sectioned beam is torsion this shortcoming should be considered in calculating rotations and torsional stresses. Structures modelled using standard beam elements in most general purpose FEA software would yield incorrect results. Some FEA software does offer beam elements that account for warping effects.

Shear flexibility is important for deep short beams. Ignoring shear effects for this configuration would result in an overestimate of flexural stiffness.

The input data required for plate and shell members is thickness. Most finite element computer programs can accommodate nonuniform thickness and have the facility to input different thicknesses at each node.

2.4.1 Mass for Dynamic Problems

The subject of mass modelling cannot be treated without some preliminary discussion. The discussion concentrates on two main issues. The first matter is the necessity for reducing most dynamic problems to a manageable size. The second concerns two alternative methods for mathematically representing mass. Each is treated in turn.

The main difference between static analyses and dynamics analyses is the far greater computational effort required for the latter compared with the former. Therefore, it is usually not practicable to treat dynamic problems in the same way as static problems except in the most trivial cases. It is usually necessary to reduce the size of the problem by reducing the number of dynamic degrees of freedom (dof). This may be done explicitly or implicitly depending on the algorithm used for extracting eigenvalues

and eigenmodes. Certain techniques, such as Subspace Iteration, implicitly reduce the size of the problem. The degree of reduction depends on the number of modes that need to be extracted. The reduction process can also be accomplished more directly by a procedure known as condensation and perhaps the best known such technique is Guyan reduction. While the condensation process is generally detrimental to accuracy, the loss of accuracy need not be significant if the appropriate guidelines are followed.

There are two alternative methods for mathematically modelling mass. The simpler of the two methods is the lumped mass method in which concentrated mass is located at nodes. The value of the mass represents the mass of the surrounding structure and equipment. This approach yields mass matrices that are diagonal. Rotational inertias may also be modelled in this fashion, or can be condensed out. Rotational inertias are often ignored when this method is used. The alternative approach is called the consistent mass method. This is a theoretically rigorous method that results in a mass matrix with off-diagonal terms. The presence of these off-diagonal terms in the mass matrix is responsible for making dynamic analysis using consistent mass matrices more computationally demanding than when using lumped mass matrices. For large models there does not appear to be much difference between the two methods in terms of the accuracy attained, at least for lower frequencies.

Whatever the technique may be for calculating natural frequencies and modes, the mass distribution needs to be accurately modelled.

Natural frequencies and modes are calculated for one of the following reasons:

1. to compare natural frequencies and modes of a structure with the frequency/ies of some source of vibration
2. as the first stage in the calculation of structural response.

In either case it is necessary to anticipate the results to some extent. In the first case the natural frequencies calculated must bracket the frequency of the vibration source. In the second case the spectrum of the forcing function, for example harmonic forces from the propellers or impulse loads from underwater shock, will suggest the range of natural frequencies of the structure that need to be calculated.

The higher the vibration mode, the more detailed the mass distribution needs to be. The general principle is illustrated in Figure 3-2.4. In the actual structure the mass is distributed over the length. Hence, a reasonable number of lumped masses are required to represent the distributed mass. For higher modes a more detailed representation of mass is required because the mode shape is more complex. In the example shown in the figure essentially a single mass is being used to represent the dynamics of one lobe of the third vibration mode. This is in contrast to the five masses used to represent the dynamics of the single lobe in the first mode.

2.4.2 The Influence of Surrounding Fluid

Certain problems in ship structures require that the interaction between the structure and the fluid be considered. The comments made here are limited to cases in which

fluid displacements are small. The most common example is the vibration of plated structures adjacent to fluid.

For vibrations of plated structure adjacent to fluid, the practice is to account for the presence of the fluid by adding masses to the structure to represent the fluid. This mass is usually termed "added mass" and represents the part of the mass of fluid the structure has to accelerate during vibrations. There are several sources for data on added mass appropriate to plate vibrations (see ISSC, 1991- Report II.2 for typical sources).

Hull girder vibrations can be treated similarly. Chalmers (1993) provides guidance on approximate methods for computing added mass for the hull girder.

The use of added masses to account for fluid-structure effects is generally quite approximate. More rigorous methods require the finite element modelling of the surrounding fluid. Many general purpose FEA systems include fluid elements that allow certain types of acoustics, sloshing and fluid-structure analysis problems to be solved. This is a specialist area. For guidance the reader is referred to finite element texts and the user manuals of the FEA system to be used in the analysis.

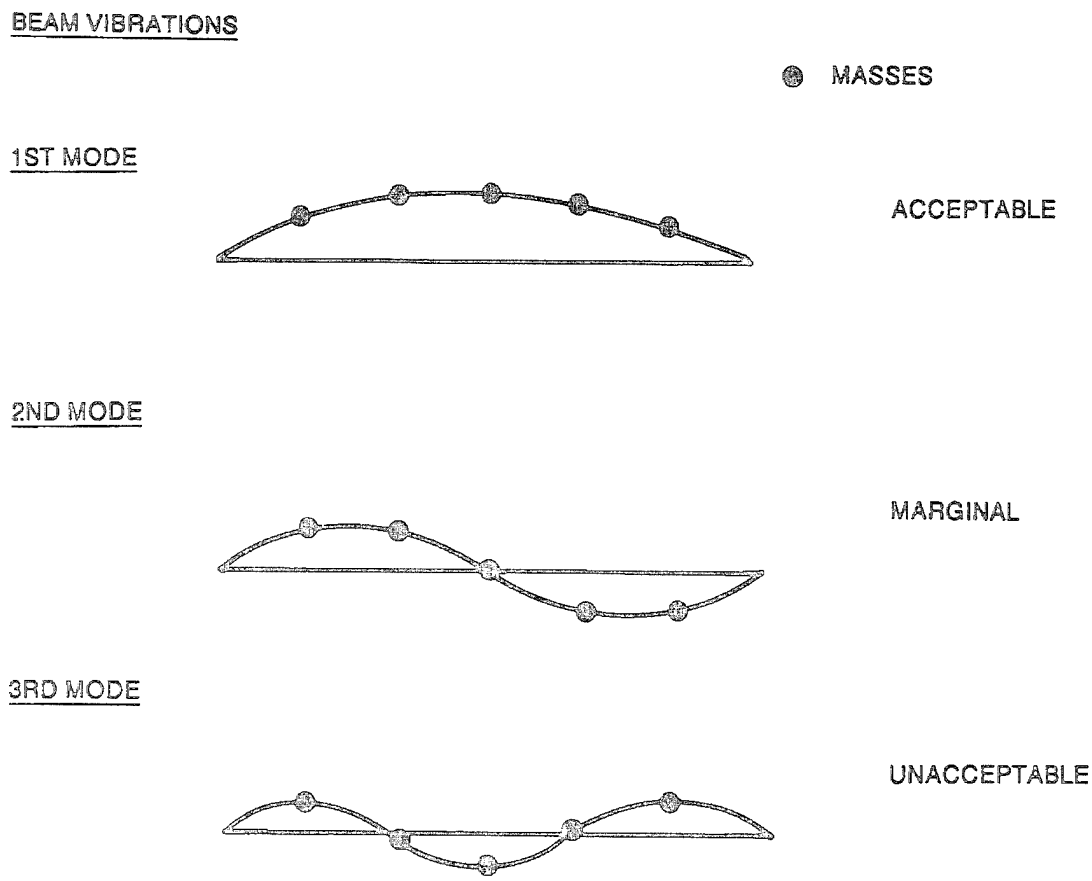

FIGURE 3-2.4 Mass Distribution Required for Accurate Determination of Natural Frequencies

2.5 Dynamic Degrees of Freedom

Once the frequency range of interest is decided upon, the mode shape for the highest frequency in this range needs to be estimated. This will indicate the number of dynamic dof's required to yield accurate results. Predicting a mode shape in advance is usually very difficult unless the structure is relatively simple. Therefore, it may be necessary to follow an iterative process in which the mass distribution is refined at each iteration.

Certain algorithms require any problem size reduction to be undertaken by the analyst. In this case the analyst selects the number of dynamic dof's to be used in the analysis. The selection of the dynamic dof's to be used in the dynamic analysis requires considerable skill except for the simplest structures. The selection of dynamic dof's can be automated. The principle underlying the Guyan reduction process provides a guide on how this should be done, if done manually. The most important dynamic dof's are those that have the largest mass-to-stiffness ratio. This is because such masses are responsible for most of the vibration energy at lower modes. The concept underlying the selection of dynamic dof's is shown in Figure 3-2.5. Viewing a plot of the mode shapes will allow an assessment to be made of the reasonableness of the selection of dynamic dof's.

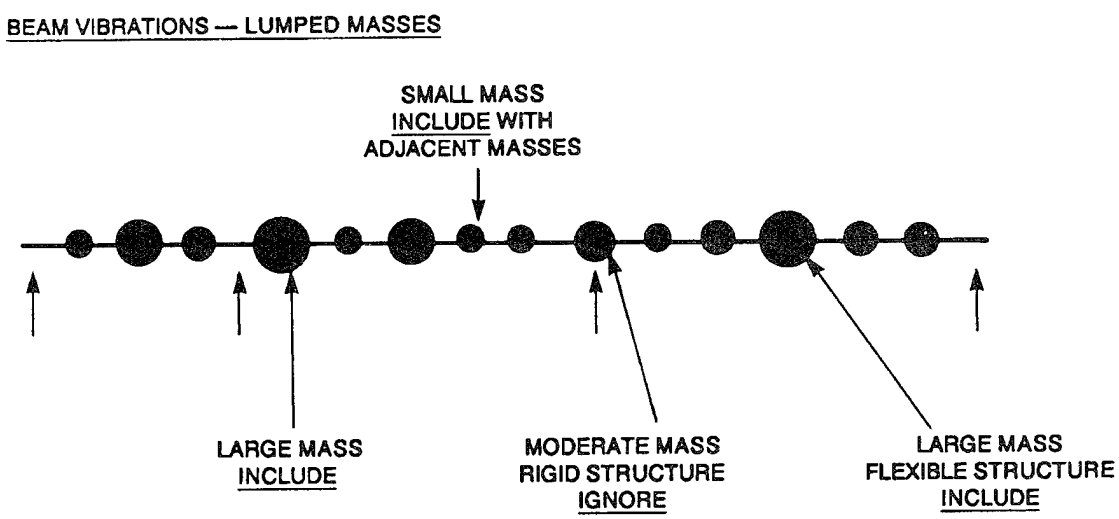

FIGURE 3-2.5 Selection of Dynamic dof's

For most structural dynamics problems translational masses are sufficient to define the problem. However, when components and equipment with large dimensions are being modelled it is prudent to model their rotational inertia. If a single mass element is being used to model the component then three rotational inertias should be input in addition to translational mass data. Alternatively, several masses can be input that approximately simulates the mass distribution. The procedures are summarized in

Figure 3-2.6.

A summary of guidelines to be followed in selected in dynamic dof's is given below:

1. The number of dynamic dof's should be at least three times the highest mode required. For example, if thirty modes are required at least ninety dynamic degrees of freedom should be specified.
2. Dynamic dof's should be located in regions where the highest modal deflections are anticipated.
3. Dynamic dof's should be located where the highest mass-to-stiffness ratios occur on the structure.
4. If a dynamic response computation is to be eventually performed dynamic dof's should be located at points where forces are to be applied.
5. For slender structures, such as masts, only translation dynamic dof's need to be selected.
6. For stiffened plate structures only dynamic dof's at right angles to the plane of the structure need be selected.
7. Enough dynamic dof's should be retained such that the modelled mass does not differ from the actual mass by more than 10%.

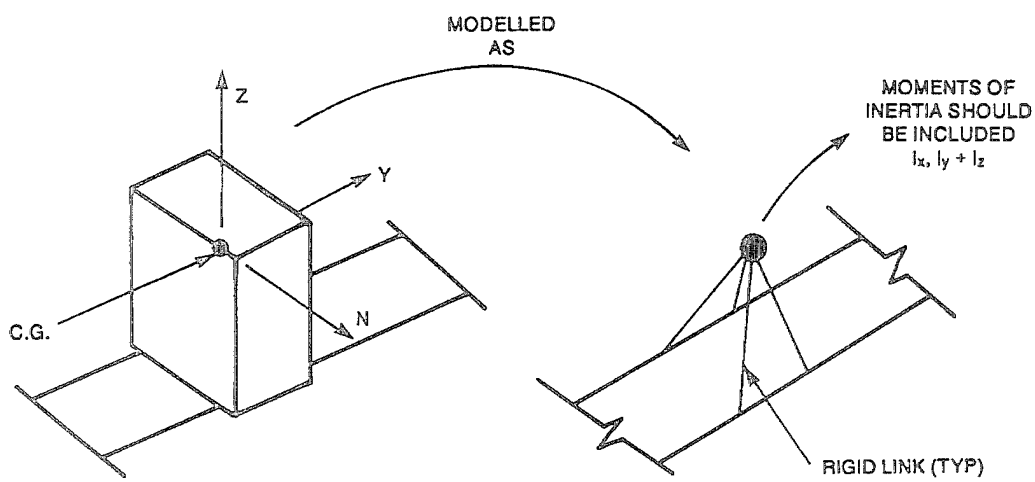

FIGURE 3-2.6 Modelling Rotational Inertia

2.6 Loads and Boundary Conditions

All loads that need to be considered should be described. The description should include a brief discussion of the accuracy level of the load.

Loads (compiled by Giannotti & Associates, 1984) typically applied in ship structural analyses include the following:

1. **Hull Girder Loads** consist of wave induced and still water loads on the hull girder. This load should be considered for longitudinal structure in the main hull, and for interaction of a long continuous deckhouse (superstructure).
2. **Hydrostatic Loads** are pressure loads due to fluids. The pressure could be either internal or external. Examples of hydrostatic loads are external pressure of the bottom and sides of shell plating, and internal pressure in tanks and on water tight bulkheads.
3. **Hydrodynamic Loads** consist of liquid sloshing in tanks, shipping of green water on the weather deck and impacting on the house front, and wave slap on all exposed structure and equipment above the waterline, etc.
4. **Live Loads** consist of uniform deck loading, concentrated loads such as forklift or aircraft landing and parking loads, support reactions from stanchions and equipment, cargo container reactions, etc.
5. **Dead Loads** consist of the weight of the structure.
6. **Ship Motion loads** consist of inertial forces that act on the entire ship and are important design loads for masts and topside foundations, such as topside cargo attachments. The effect of ship motion loads on the hull girder is to produce vertical and horizontal bending moments and torsion. A lengthy analysis is required to determine these values for a particular ship and service characteristics.
7. **Shock Loads** consist of displacements, velocities and accelerations in all three directions. This load is important for naval ships in the design of vital equipment and their foundations, and ship structure in the vicinity of these foundations.
8. **Missile and Gun Blast Loads** consist of a transient pressure and thermal load for all structure within the blast impingement area, usually a static equivalent pressure is used.
9. **Nuclear Overpressure** consists of transient travelling pressure wave from a nearby nuclear air blast, this is an important consideration in the analysis of deckhouses (superstructures).
10. **Vibratory Loads** consists of cyclic loading from rotating machinery, especially from propellers, low frequency full girder response from slamming and springing can also be significant.
11. **Thermal Loads** are caused by heat inputs from:
    - solar radiation
    - exhaust impingement from stack gases
    - operation of machinery, especially combustion engines (important to deckhouses and exhaust ducting), diesel generator foundations and condenser foundations
12. **Environment loads** consist of wind, snow and ice loads.

A description of the boundary conditions applied to the model, and the reasons for the approach adopted, should be described. The description should include, but not be limited to, a discussion of:

- model symmetry, antisymmetry and axisymmetry
- material property changes at the boundary
- stiffness changes at the boundary
- assessment of influence on results of assumptions made concerning boundary conditions

3.0 FINITE ELEMENT MODEL CHECKS

The subject of this section is the checks that should be performed to ensure that the physical problem is appropriately translated into the finite element model. Hints are provided on various aspects of a finite element model such as appropriateness of the element type/s used, the density of finite element mesh used for plated structures, substructuring and submodelling used to optimize the problem size, loads and boundary conditions, and the solution process. There is also a short subsection on graphical checks using the software's pre and post processors to scrutinize the finite element model and results.

Since access to the software is essential to perform many of these checks, it is the responsibility of the contractor to ensure that these checks are performed. However, documentation, in the form of plots and graphs, should be available for audit.

Several examples illustrating finite element modelling practice are presented in Appendix C. The purpose of these examples is to show the effect of varying certain finite element modelling parameters on the results. The main modelling parameters addressed in this appendix are element type and mesh density.

3.1 Element Types

To some extent all finite element types are specialized and can only simulate a limited number of types of response. An important step in the finite element modelling procedure is choosing the appropriate element/s. The elements best suited to the particular problem should be selected while being aware of the limitations of the element type. A good guide to the suitability of an element type is their performance in other similar situations.

Element performance is generally problem dependent. An element or mesh that works well in one situation may not work as well in another situation. An understanding is required of how various elements behave in different situations. The physics of the problem should be understood well enough to make an intelligent choice of element type. As a rough guideline, Cook et al. (1989) consider elements of intermediate complexity work well for many problems. According to this reference the use of a large number of simple elements or a small number of very complex elements should be avoided.

Linear stress field elements are currently the most commonly used. Almost all finite element analysis (FEA) software have families of elements that include elements with linear stress capabilities. For many portions of structures a mesh of linear stress elements can provide a good description of the stress state. In areas of discontinuities, high thermal gradients, fatigue studies, or nonlinear material problems, where there is an interest of evaluating more than just a linear stress state, linear elements in a relatively fine mesh can give excellent results.

Elements with quadratic and higher order stress fields require cubic or higher order displacement functions. These elements have either more nodes per elements and/or more degrees of freedom per node. This make them more expensive in terms of

computational effort to form the element stiffness matrices, but fewer of them are required than a model using simpler elements to attain the same level of accuracy.

Complex structures (eg., ship deck structure with openings) require relatively fine meshes to model the geometrical discontinuities adequately. According to Kardestuncer (1984) higher order elements are practical only when modelling areas of high stress gradient with a relatively coarse mesh. Even then, the quadratic or higher order fit may over or underestimate the stresses at the free surfaces. The order of the stress function must match the gradient properly. The behaviour of linear stress elements is easy to visualize which is one reason for their popularity. Another limitation higher order elements suffer is the limited availability of companion elements. Lower order element families have a complete range of elements, and therefore it is easier to use these element types when it is necessary to mix different elements (eg., plates and beams).

3.1.1 Structural Action to be Modelled

When a finite element model of a structure is being planned, it is necessary to have a clear concept of the main structural actions. Each element type has limitations and is designed to model a single or limited number of structural actions.

Before modelling a structural problem, it is useful to have a general idea of the anticipated behaviour of the structure. This knowledge serves as a useful guide in several modelling decisions that need to be made in building the model. In an ideal situation the first model will yield adequate results. However, the first model is seldom adequate. Hence, one or more revisions will usually be necessary.

In triangulated framed structures, if the members are relatively slender, then the main action is axial with limited bending action. In this case, the use of truss elements would be justified, and the use of beam elements may introduce an unnecessary complication. In certain cases a mixed approach may be appropriate. Consider a lattice mast as shown in Figure 3-3.1. The main legs, which are continuous, should perhaps be modelled using beam elements whereas the bracing members would be better modelled using truss elements.

Similarly, deck structure in ships that is subject primarily to in-plane loads, rather than transverse loads, is better modelled using membrane elements rather than plate/shell elements. However, if the analysis of deck structure is local in nature and the loading is transverse, then plate bending elements would be required. In this case transverse shear effects may be significant. Certain element formulations do not account for shear. Some FEA software provide plate bending elements in which the ability to model transverse shear is optional and has to be selected by the analyst.

If through thickness stresses are considered to be important, then the use of solid elements is prudent.

3.2 Mesh Design

Mesh design, the discretization of a structure into a number of finite elements, is one of the most critical tasks in finite element modelling and often a difficult one. The following parameters need to be considered in designing the layout of elements: mesh density, mesh transitions and the stiffness ratio of adjacent elements. As a general rule, a finer mesh is required in areas of high stress gradient. It is possible, of course, to use a fine mesh over the whole model. This is undesirable on two counts: economy and the greater potential for manipulation errors. Hence, meshes of variable density are usually used. Care is required in transitioning of mesh density. Abrupt transitioning introduces errors of a numerical nature. This subsection provides tips on these aspects of mesh design.

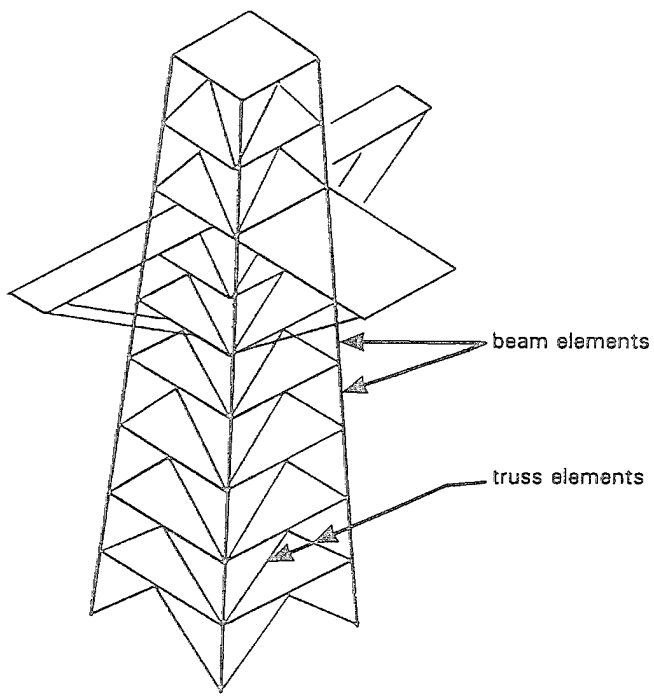

FIGURE 3-3.1 Typical Lattice Structure

3.2.1 Mesh Density

The density of the mesh depends upon the element type used, distribution of applied load and purpose of the analysis. The basic rule is that the mesh is refined most in the regions of steepest stress gradients. Therefore, if such regions can be identified during mesh design, the probability of developing an economical mesh with sufficient refinement is high. In this regard experience plays an important role in striking a balance between economy and adequate mesh density. Analysis of similar structures under similar loading conditions in the past can help in the identification of stress concentrations and regions of rapid changes in stress patterns.

In cases where experience of a particular configuration is lacking and where it is difficult to anticipate the nature of the stress gradients, an iterative approach is necessary. Where stresses show a sharp variation between adjacent elements, the mesh should be refined and the analysis rerun. If the primary goal of the analysis is to assess deflections, and not stresses, then a comparatively coarse mesh may be used.

Mesh density also depends on the type of analysis. A nonlinear or vibration analysis usually requires a more refined mesh compared to a static stress analysis. Predicting higher frequency modes usually requires a finer mesh than that required for lower frequency modes.

Load distribution and load type also have an influence on the mesh density. Nodes at which loads are applied need to be correctly located, and in this situation can drive the mesh design, at least locally. In the case of a uniformly distributed load, such as edge pressures or face pressures, element types that support the particular type of load should be used.

Finally, if higher order elements are used with quadratic or cubic stress fields, then a relatively coarse mesh can be used in the areas of high stress gradients, since the order of the stress function will match the gradient more accurately. For lower order elements with linear or constant stress fields, proper refinement of the mesh is required to obtain accurate results.

3.2.2 Element Shape Limitations

The element aspect ratio is the ratio between the longest and shortest element dimensions as shown in Figure 3-3.2.

A crude rule of thumb that can be used is to limit the aspect ratio of membrane and bending elements to three for good stress results, and to five for good displacement results. The ideal shape for quadrilateral elements is square and equilateral for triangular elements. Hence, the use of ideally shaped elements is particularly desirable in areas of high stress gradients. In general, higher order elements are less sensitive to departures from the ideal aspect ratio than lower order elements. This observation also applies to solid elements.

Since an element's sensitivity to aspect ratio is dependent upon both element formulation and the nature of the problem, general tests and problem dependent checks may be justified in cases where element performance is not well known.

Generally the performance of elements degrades as they become more skewed. Skewing is defined as the deviation of vertex angles from 90E for quadrilaterally shaped elements, and from 60E for triangularly shaped elements as shown in Figure 3-3.3. For quadrilateral elements, angles greater than 135E and smaller than 45E are not recommended. The limiting range recommended for triangular elements is 45E and 90E. Skewed quadrilateral elements shaped more like parallelograms generally perform better than more irregularly shaped ones.

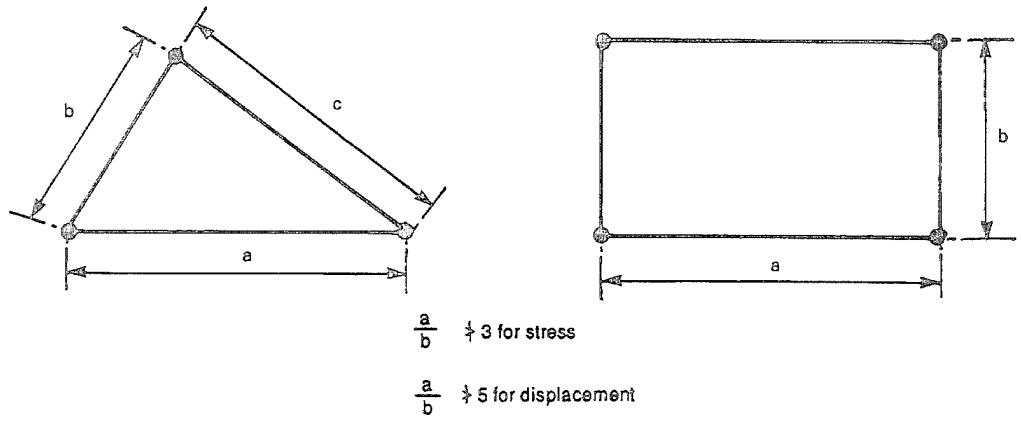

FIGURE 3-3.2 Aspect Ratio of Plane Elements

When element nodes are not in the same plane, the element is warped as shown in Figure 3-3.3. This is undesirable and the degree to which this impairs the performance of plate elements depends on the element formulation. Hence, the best guidance in regard to limiting levels of warping is contained in the particular FEA program's user manual. The use of triangular elements is an option where curvature of the structure is high.

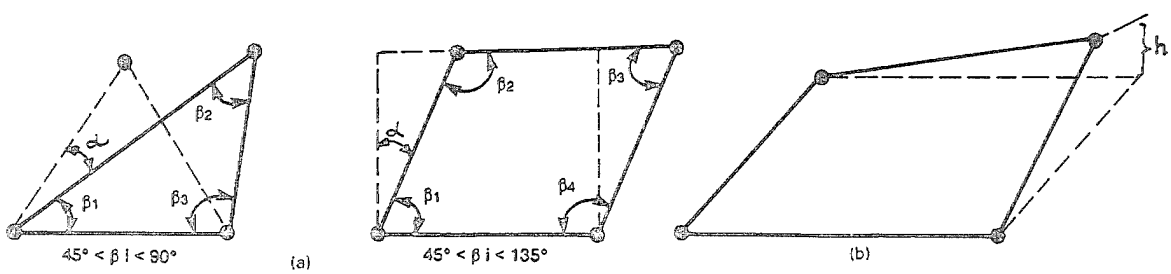

(a) Skewed Elements (b) Warped Element

FIGURE 3-3.3 Element Shape Limitations

3.2.3 Mesh Transitions

If the mesh is graded, rather than uniform, as is usually the case, the grading should be done in a way that minimizes the difference in size between adjacent elements. Figure 3-3.4 presents several examples of transitions using quadrilateral elements. These examples attempt to keep within the guidelines for element distortion discussed in Section 3.2.

Another way of viewing good transitioning practice is to minimize large differences in stiffness between adjacent elements. A useful measure of stiffness is the ratio E/Ve, where E and Ve represent the elastic modulus and the element volume respectively. As a working rule, the ratios of E/Ve for adjacent elements should not change by more than a factor of two (Connor and Will, 1969).

Sometimes transitions are more easily achieved using triangular elements. Transitions of this type are illustrated in Figure 3-3.5. Most FEA programs will allow two nodes of a quadrilateral element to be defined as a single node in order to collapse the element to a triangular shape.

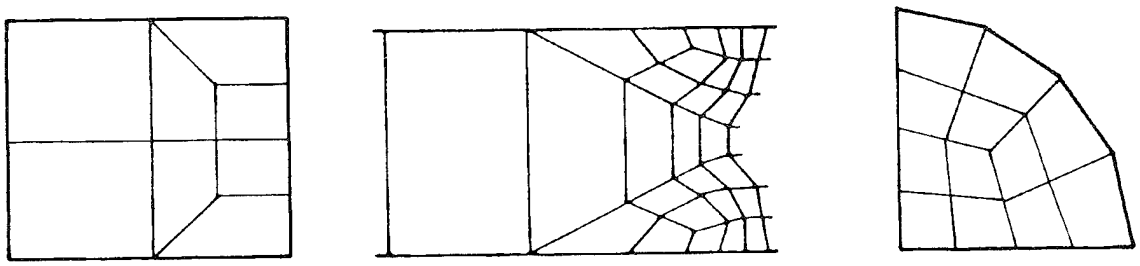

(a) (b) (c)

a, b) RECTANGULAR PLATE c) CIRCULAR PLATE

FIGURE 3-3.4 Transitions from Coarse to Fine Meshes

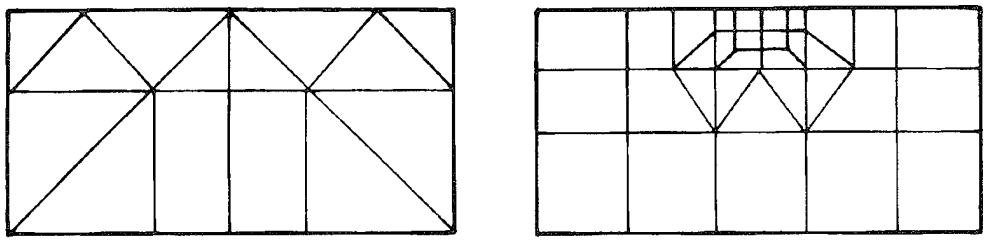

CLOSER APPROXIMATION OF LOAD SINGULARITY

CLOSER APPROXIMATION OF REALISTIC LOAD

FIGURE 3-3.5 Transitions Using Triangular Elements

In modern FEA installations most analysts rely on preprocessors to develop the finite element mesh. In general, automatic mesh generators yield adequate meshes. However, in very demanding configurations the mesh generator may produce a poor mesh. In such situations the mesh should be manually improved to meet the guidelines.

In regular rectangular meshes there are two basic types of transition. One is the change in element density in the direction of the stress gradient, the second is transverse transitioning, which is used between areas with different element size and densities across a transverse plane as shown in Figure 3-3.6.

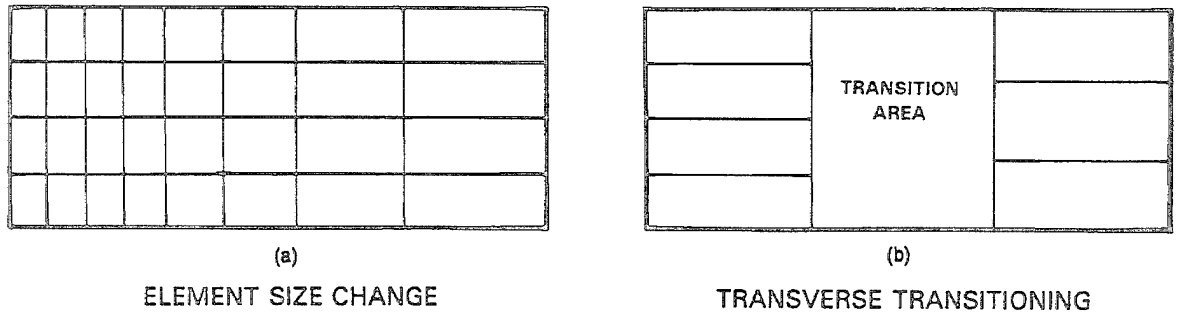

FIGURE 3-3.6 Mesh Transitions

Many rules of thumb for transitioning of elements are based on element strain energy and strain-energy density calculations. The ideal finite element model should have a mesh with constant strain energy in each element. To achieve constant strain energy of elements the volumes must be relatively small in regions of high stress or strain and large in regions of low stress or strain. Transverse transition regions should be used only in areas of low stress gradient and never near regions of maximum stress or deflection.

3.2.4 Stiffness Ratio of Adjacent Structure

In modelling complex structural assemblies there is a possibility of constructing models where adjacent structural elements have very different stiffnesses. These types of stiffness combinations can cause ill-conditioning of the equilibrium equations which can seriously degrade results. The transitioning guidance given above avoids this problem in models that use two or three-dimensional elements. For truss and frame structures a different approach is required. To prevent large numerical errors in these cases, stiffness ratios of the order of 10^4 and more between members making up a model should be avoided. This is admittedly a conservative number. More realistic guidance can be obtained by undertaking tests.

The problem of stiffness mismatch is most severe in structures where a relatively rigid portion of structure is supported on flexible structure. In such cases the deflections in the rigid portion are due more to rigid-body movement rather than elastic distortion. In these cases it is suggested that the stiff portion be treated explicitly as a rigid body using rigid links, rigid regions, constraints, or combinations of these approaches.

3.2.5 Miscellaneous Problems

Improper connections between elements of different types can cause errors. Solid elements types, for example, have only translational nodal degrees of freedom. If solid elements are interconnected with beam or plate/shell type elements, which have rotational degrees of freedom, in addition to translational ones, care must be taken to allow for the transfer of moments if that is what is intended. If this is the case then it is best accomplished with linear constraints or multipoint constraints. In case the program does not offer such options, the beam (or plate) can be artificially extended through the solid elements. Figure 3-3.7 illustrates the problem and a solution for a sample problem.

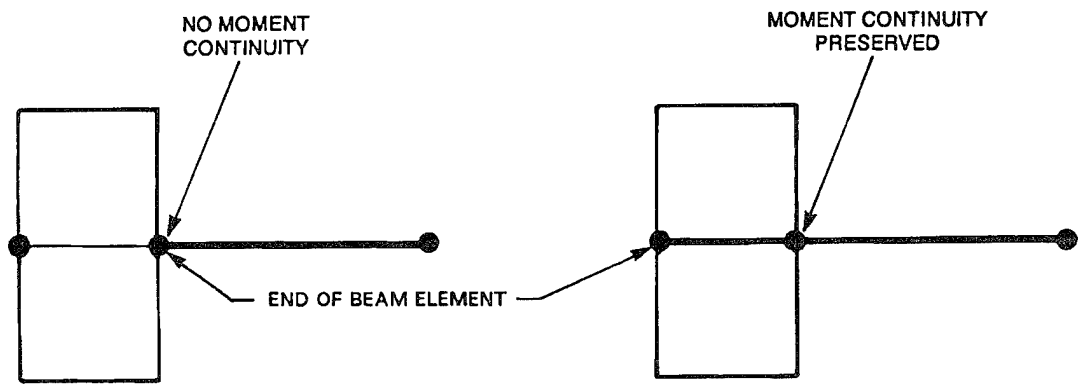

FIGURE 3-3.7 Connecting Elements with Different Nodal Degrees of Freedom

Most flat plate/shell element formulations do not have a shape function for the rotational degree of freedom about a normal to the surface of the element. Hence, in-plane rotational stiffness is not modelled. Some programs provide a nominal rotational stiffness to prevent free rotation at the node. Other programs use certain formulations to improve this aspect of performance but at the cost of the presence of spurious modes. The user should be aware of the possible limitations in the program that is being used when modelling situations in which moments are to be transferred into the plane of assemblages of flat plate/shell elements. The problem, and one possible solution, is illustrated in Figure 3-3.8.

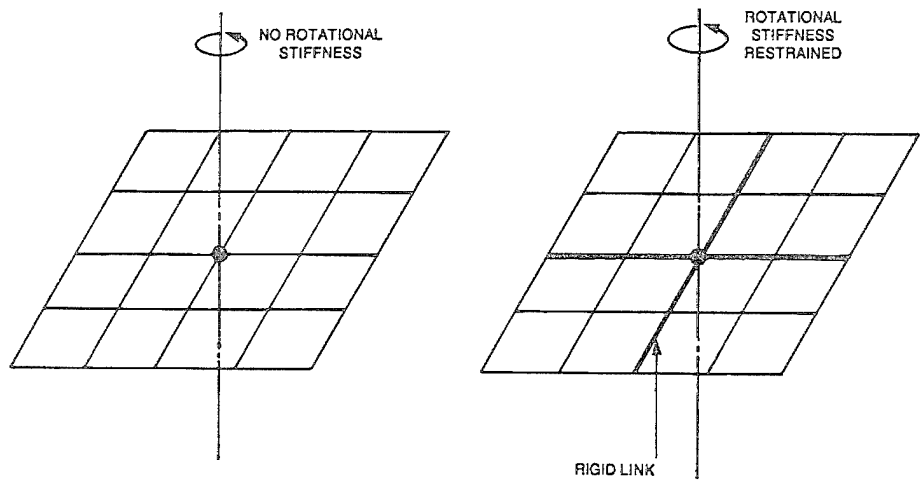

FIGURE 3-3.8 Modelling in-Plane Rotational Stiffness of Membrane Elements

3.3 Substructures and Submodelling

3.3.1 Substructuring

The primary reason for using substructuring is to reduce computational effort in the solution process. However, this saving has to be traded-off against certain other computations that substructuring requires which a normal analysis would not entail. Irons and Ahmed (1980) identify three circumstances in which substructuring might be attractive:

1. The same substructure is used repeatedly in the structure.
2. A relatively small portion of a structure may behave nonlinearly.
3. In a major design effort, different teams may be developing different parts of the structure. The use of substructuring would allow substructures of different versions of parts of the structure to be analyzed together. This feature could be very useful during the exploratory and concept design phases of large structures.

Limited computer core capacity as the reason for substructuring is becoming of less concern as the cost of computer memory decreases.

The use of substructuring in the FEA of ships is only likely to be attractive for models involving a substantial portion of the ship. If a general purpose FEA system is used it is essential to have an understanding of the substructuring technique. Even in the case of design-oriented FEA programs it is useful to have an appreciation of the technique.

The ease with which substructuring can be undertaken depends on the features available in the FEA system being used. This section will be confined to a broad description of the steps necessary to undertake successful FEA using substructuring, guidelines in using substructuring techniques, and structural configurations where such techniques might be considered.

The basic steps in FEA using substructuring are:

1. Review of the global model and identification of portions of the structure that repeat. Sketch of the global model indicating substructure boundaries. Design of mesh in substructures and determination of boundary nodes.
2. Enter input data. Undertake condensation of substructures and develop substructure stiffness and load matrices.
3. Generation of global stiffness matrix which, in general, will require combining the reduced substructure matrices with portions of the structure not modelled as substructures. At this point all the elements of the system equilibrium equations are available.
4. Solve the system equilibrium equations. This run will only yield displacements at substructure boundaries and portions of the model that were modelled in the usual way.
5. The displacements from the global model can be back substituted into the substructure equations, as described below, to yield displacements and stresses within the substructures. This will be repeated for each substructure since, in general, the boundary displacements for identical substructure models will be different.

The following guidelines for substructure analysis are adapted from Steele (1989):

1. Substructures can be generated from individual finite elements, from other substructures, or both.
2. Master nodes to be retained must be identified and specified as input when the stiffness matrices for substructures are calculated. Master nodes include boundary nodes and nodes subject to loads.
3. Nodes on substructure boundaries that will be used to connect the substructure to the rest of the global model must be retained as master nodes.
4. Nodes constrained in substructures when substructure stiffness matrices are calculated will be constrained in subsequent stages of the analysis. These constrained nodes cannot be released in later stages. However, master nodes can be restrained during analysis of the global model.
5. For a substructure to be cost-effective it should be used at least three times (i.e., replicated twice).

The following paragraphs contain a description of static condensation, which is a technique fundamental to substructuring. Also discussed is the two-stage analysis technique which has found favour with many analysts. This is followed by a summary of recommendations.

3.3.2 Static Condensation

In the condensation technique the number of degrees-of-freedom (dof's) in a portion of the structure is reduced by condensing out the internal degrees-of-freedom (dof) the remaining active ones being on the boundary. The process is illustrated in Figure 3-3.9. This substructure can be regarded as a special type of finite element, and, indeed, is sometimes referred to as a superelement. The mathematics of the process are relatively simple.

The equilibrium equations of the substructure with all its dof's intact is partitioned as follows:

$$\begin{bmatrix} k_{rr} & k_{rc} \\ k_{cr} & k_{cc} \end{bmatrix} \begin{Bmatrix} \delta_r \\ \delta_c \end{Bmatrix} = \begin{Bmatrix} f_r \\ f_c \end{Bmatrix} \qquad (3.3.1)$$

in which the subscripts r and c refer to dof's to be retained and condensed out respectively. An expression for δ_c can be extracted from the lower partition, which can then be substituted in the upper partition to yield:

$$\left([k_{rr}] - [k_{rc}]\,[k_{cc}]^{-1}[k_{cr}] \right)\{\delta_r\} = \{f_r\} - [k_{rc}]\,[k_{cc}]^{-1}\,\{f_c\} \qquad (3.3.2)$$

or in more compact form:

$$[K_C]\{\delta_r\} = \{F_C\} \qquad (3.3.3)$$

where

$$[K_C] = [k_{rr}] - [k_{rc}]\,[k_{cc}]^{-1}[k_{cr}]$$

and

$$[F_C] = \{f_r\} - [k_{rc}]\,[k_{cc}]^{-1}\,\{f_c\}$$

The equilibrium equations given by Equation (3.3.3) can be solved in the usual way. If required, displacements internal to the substructure can be recovered by static condensation of Equation (3.3.1) using the Gaussian reduction procedure. Static condensation amounts to eliminating selected variables using the Gaussian reduction procedure. It is important to note that no approximation is involved in this process. The condensed out dof's are often called slave dof's and the retained dof's are called master dof's.

3.3.3 Two-Stage Analysis

In cases where local mesh refinement is required a two-stage analysis may be justified (see Steele, 1989 for practical aspects of two stage analyses). The first stage of this technique involves the analysis of a coarsely meshed global model. The local area of particular interest is remeshed using a finer mesh and reanalysed using prescribed displacements at the boundary of the refined model as boundary conditions. The prescribed displacements are taken from the global analysis. The process is illustrated in Figure 3-3.10. The applied loading, i.e., stresses from the global analysis translated into pressure loading for the refined model, can also be used as boundary conditions. However, the use of displacements as boundary conditions is a more common practice since it eliminates the need to provide additional restraints for sufficiently supporting the model.

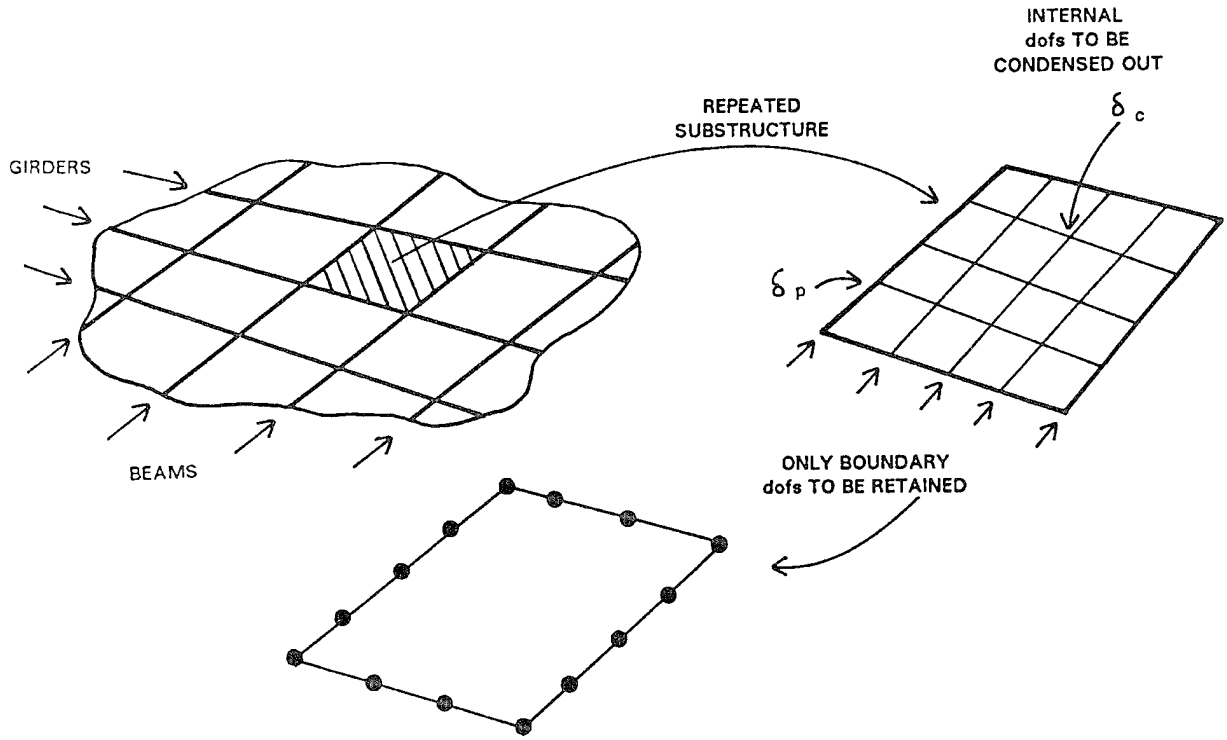

FIGURE 3-3.9 Schematic Illustration of The Static Condensation Process

Design-oriented FEA programs such as MAESTRO, which model the whole or a substantial part of a ship, suit this technique. The displacements from a model developed employing such programs can be used as prescribed boundary conditions for a local fine mesh model.

In general, there will be several nodes on the boundary of the refined mesh model that are not modelled in the global model. Therefore, prescribed displacement values are only available for boundary nodes that exist in the global model. The practice is to assume a linear variation in displacement, interpolated from the displacements from the global model, for intermediate nodes. This observation is suggestive of where the appropriate position for the boundary might be. Ideally, boundaries should be placed in areas where gradients in displacement are small. A comparison of undeflected and deflected plots of the global model will yield this information.

A finer finite element model is generally more flexible than it's coarser equivalent. Hence, there will be a tendency to underpredict the stresses in the refined model when using displacements generated in the global model. It is possible to correct approximately for this tendency using a procedure described by Cook et al. (1989). The procedure requires the computation of the nodal loads produced by the prescribed boundary displacements. The nodal loads for the local area in the global model are given by:

$$\{F_g\} = [K_g]\{\delta_g\}$$

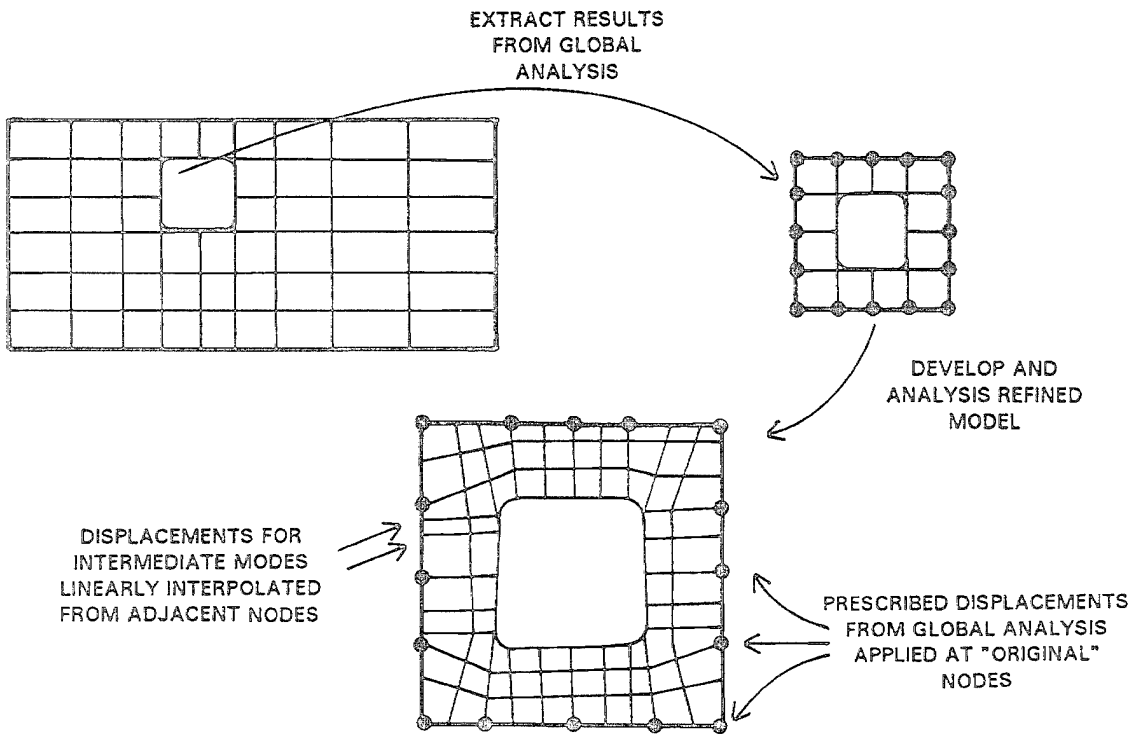

FIGURE 3-3.10 Two-Stage Analysis

in which K_g, δ_g, and F_g are the stiffness matrix, displacements, and calculated forces pertaining to the degrees of freedom associated with the nodes on the boundary of the local area. The corresponding expression for the refined model is:

$$\{F_r\} = [K_r]\{\delta_r\}$$

The subscript "r" refers to the refined model. Note that only the nodes common to both, the local area in the global model and refined model, are included in the above expressions.

Once the forces for both cases have been derived, the vector norms for these quantities are calculated. The norm, is a measure of the "size" of vector, or the size of the nodal loads. There are many types of norms, but for present purposes the following version is recommended:

$$\|F\| = \left(\sum_{i=1}^{n} |F_i|^2\right)^{1/2}$$

where F_i refers to the value of nodal load and n is the number of degrees of freedom on the boundary that are common to both the local area of the global model and the

refined model. The ratio of the norms for both the cases is calculated to yield a factor as follows:

$$Factor = \frac{F_g}{F_r}.$$

This factor, which usually exceeds unity, when applied to all stress results from the refined model, approximately corrects for the overstiffness of the global model results.

The convenience with which this technique can be applied will depend on the FEA software being used.

3.4 Loads and Boundary Conditions

The task of selecting appropriate boundary conditions for the model is often challenging. Generally, the support condition assumed for the degree of freedom concerned is idealized as completely rigid or completely free. In reality the support condition is usually somewhere in between.

Several techniques are used to minimize the impact on the analysis of the assumptions made in boundary conditions. The most popular is to develop models large enough such that the area of interest is sufficiently remote from the boundary. It is also the practice to make conservative assumptions so that the results will represent upper bound solutions.

The best guide for determining the extent of structure to model and determining the locations for boundaries are natural structural restraints or rigid or stiff supports such as: major structural bulkheads, vertical pillars and columns or other structural components such as deep fabricated beams and girders.

It is possible to simulate various types of symmetry, antisymmetry and axisymmetry by applying the appropriate boundary conditions. These and other topics related to boundary conditions are discussed in greater detail below.

3.4.1. Minimum Support Conditions

For certain models it is necessary to provide the minimum support for the structure. A good example of this is hull girder modelling in which the structure is, in reality, supported by the pressure distribution on the hull. In FEA modelling a structure with self-equilibrating forces, without any supports, is not admissible. Without proper support the equilibrium equations would be singular and therefore not solvable.

Models in a plane have three degrees of freedom, and hence need to have two translations and a rotation constrained. Care is needed in avoiding the possibility of rigid body motion. These principles are illustrated in Figure 3-3.11. Models in three-dimensional space need three translations and three rotations constrained. Examples to illustrate minimum support conditions required are provided in Figure 3-3.11.

3.4.2 Boundary Conditions for Simulating Symmetry

Many structures have one or more planes of symmetry. It is possible to take advantage of this in FEA, and model just one portion of the structure. Through various devices it is possible to analyze structures with a plane of symmetry but subject to nonsymmetric loads. Such approaches are used to reduce modelling and computational effort.

In engineering applications, the most commonly encountered types of symmetry are: reflective symmetry, rotational symmetry and inversion symmetry as shown in Figure 3-3.12.

In engineering problems the characterization of symmetry requires not only geometrical symmetry, but also symmetry with respect to material properties and restraints.

When only part of a symmetric structure is modelled, the symmetric or antisymmetric boundary conditions must be applied at artificial boundaries introduced because of symmetry. If the y-z plane is the plane of symmetry, and Ux, Uy, Uz, and Rx, Ry, Rz are assumed as the x, y and z components of displacement and rotation respectively, the following boundary conditions have to be applied to the nodes on the plane of symmetry or antisymmetry:

$Ux = Ry = Rz = 0$ - for symmetry

$Rx = Uy = Uz = 0$ - for antisymmetry

In the case of symmetry the points lying in a plane of symmetry can suffer no translation out of the plane and no rotation about the inplane axes. For antisymmetry the complementary set of degrees of freedom are constrained.

The above discussion has been devoted exclusively to static problems, but free vibration problems (eigenvalue problems) can also exploit symmetry. The calculation of all natural frequencies and mode shapes of a symmetric structure would require one modal analysis for each unique combination of symmetric and antisymmetric boundary conditions. When only symmetric boundary conditions are applied to the plane of symmetry, antisymmetric frequencies and mode shapes are not calculated.

The conditions for static problems discussed above apply equally to linear (time-dependent) analysis. In addition, if the load is not symmetric or antisymmetric it will be necessary to decompose the load into symmetric and antisymmetric components and run the problem twice for each case and combine the results.

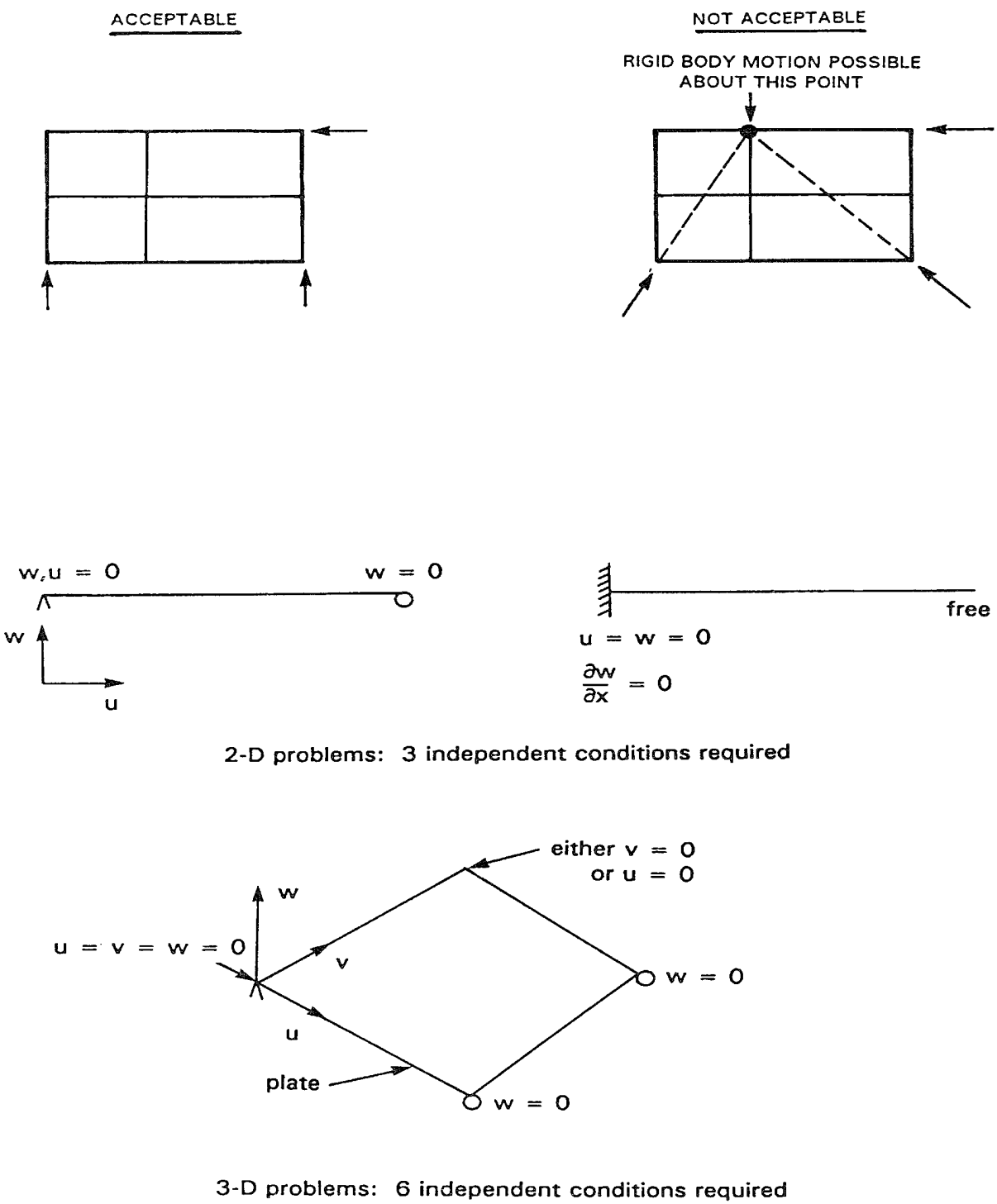

FIGURE 3-3.11 Minimum Support Conditions for Models

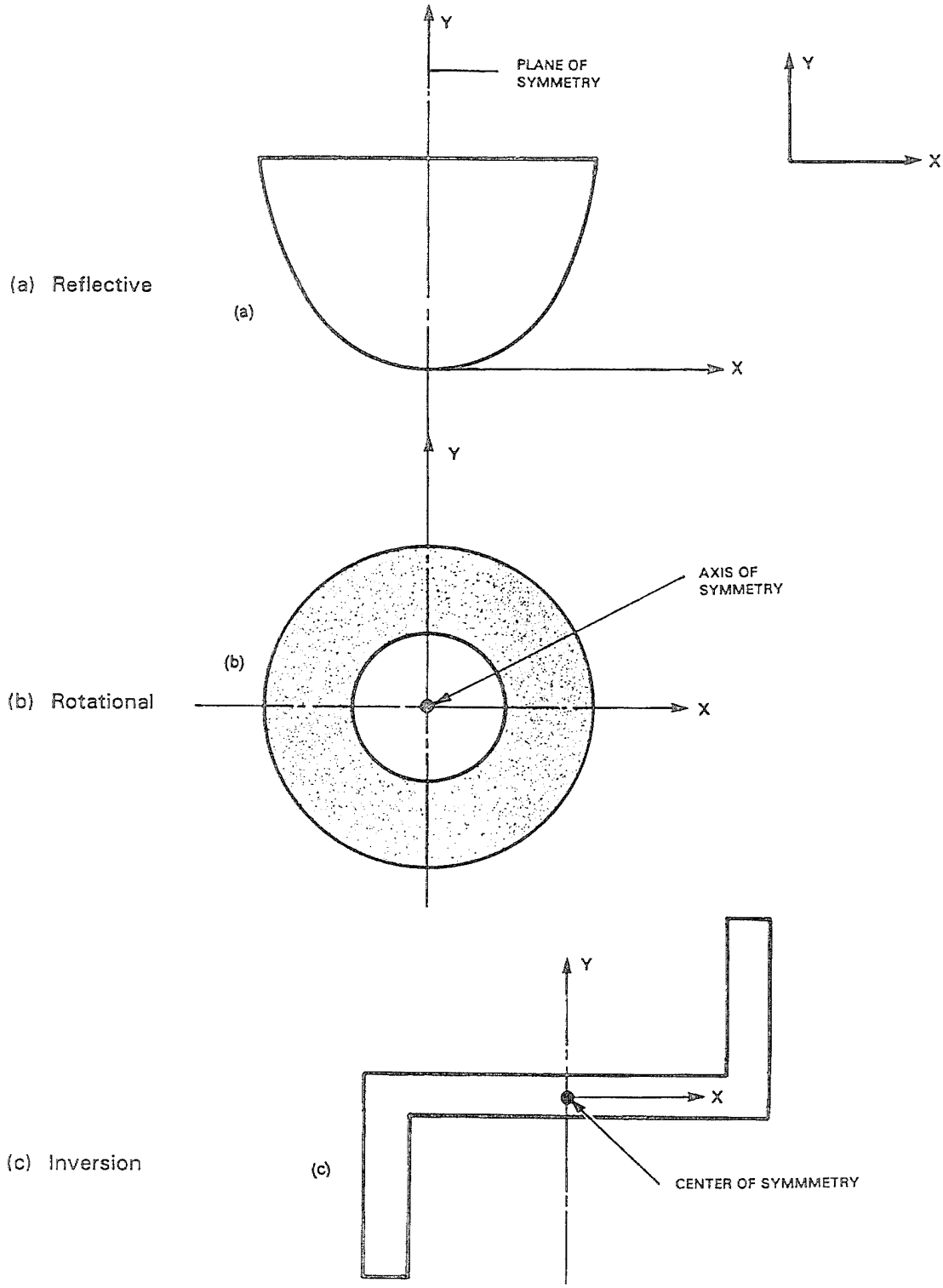

FIGURE 3-3.12 Different Types of Symmetry

3.4.3 Constraints

Constraints are enforced relationships between the dof's of several nodes. There are many situations in which constraints can be useful modelling devices. Various types are discussed below and illustrated using simple examples. The circumstances in which they may be applied, and limitations in their application, are also discussed.

The simplest form of constraint is when certain dof's of different nodes are coupled. Coupling can be used to enforce symmetry and to release forces and moments. A simple example is presented in Figure 3-3.13. During analysis, if the independent node is displaced in the y-direction and/or rotates about the y-axis, the dependent nodes are automatically displaced by the same magnitude in the same directions.

Releases can be introduced conveniently using coupling. For example, a pin can be introduced at mid-span in a continuous beam by coupling translational degrees of freedom of two coincident nodes. In certain circumstances coupling can introduce apparent violations of equilibrium.

A more powerful and general method for introducing constraints is by using constraint equations. A constraint equation is a linear equation that relates the displacement or rotational dof's of nodes. These are sometimes referred to as multi-point constraints (MPC). Constraint equations may be used for many purposes such as coupling of nodes by rigid members, rectifying small geometric discrepancies, and coupling adjacent nodes representing locally offset supports and attachments. Rigid regions in structure may be defined using constraint equations. Figure 3-3.14 illustrates the use of constraint equations using the example shown in Figure 3-3.13. In this case the equation ensures that there is no relative movement between Nodes 1 and 2 in the x-direction.

3.4.4 Loads - General

Loading in finite element modelling may be applied in a variety of ways. Typical structural loads are forces, pressure load, gravity, body forces and temperatures applied at nodes and on elements of the model. The load can be applied to:

1. nodes (eg., nodal forces and body forces);
2. element edges or faces (eg., distributed line loads, pressure)
3. the entire model (eg. gravity loads).

Generally the load types and method of its application to the model are specific to a particular FEA software package. However, descriptions of typical load types are provided in the following paragraphs.

3.4.5 Loads - Nodal Force and Prescribed Displacement

A nodal force is the combination of forces applied to the six nodal dof's. A nodal force consists of:

1. force magnitude in X, Y and Z direction; and
2. moment magnitude about X, Y and Z axes (for structural elements).

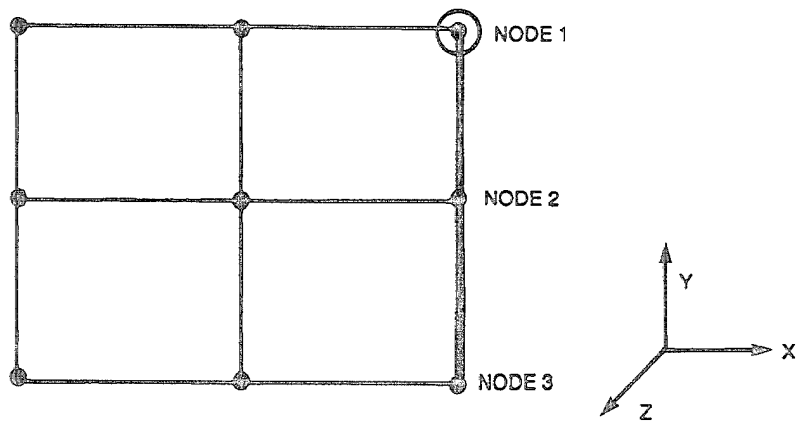

Node 1 is independent

FIGURE 3-3.13 Coupled dof: Nodes 1, 2 and 3 Coupled in the y-Direction and About the y Axis

Nodal forces are usually applied in Nodal Coordinate System as shown in Figure 3-3.15.

Applied nodal loads must be compatible with the element type used. For example, a model consisting of only solid elements has no rotational degrees of freedom. Any nodal moment loads would have to be applied in such a case as a force couple with the forces acting at different nodes.

Also forced or prescribed nonzero displacement may be input directly to nodes as a load case. This displacement should be prescribed with precision, because small changes can cause large differences in stress response.

3.4.6 Loads - Nodal Temperature

A nodal temperature is a single temperature value or pair of values applied to a node as illustrated in Figure 3-3.16. A pair of values may represent the shell top and bottom surface temperatures. Some programs allow the specification of a pair of values representing the shell mid-plane temperature and a gradient.

3.4.7 Loads - Face Pressure

A face pressure is a single pressure value applied to selected faces of elements as shown in Figure 3-3.17. The units of pressure value are force per unit area. The pressure is applied to each selected element face across the entire face, and acts in a direction perpendicular to the face. Some FEA programs allow the user to specify pressure at nodal points. A variation of pressure over an element surface can thus be defined. A constant pressure is then a special case corresponding to all element nodes having the same pressure.

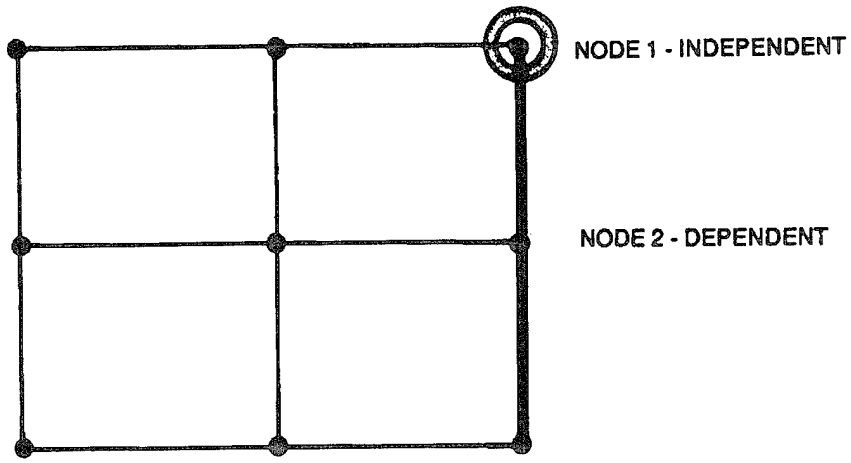

MPC: (1)X1-(1)X2 = 0.0

FIGURE 3-3.14 Constraint Equation

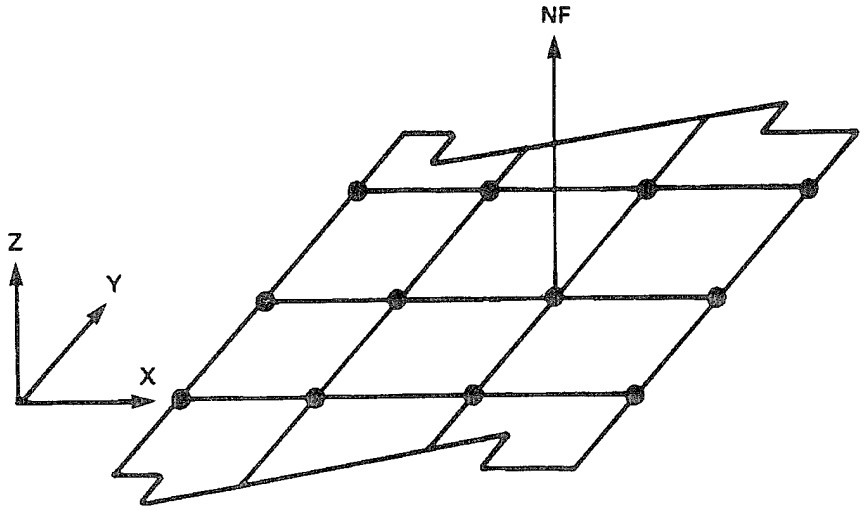

FIGURE 3-3.15 Definition of Nodal Force

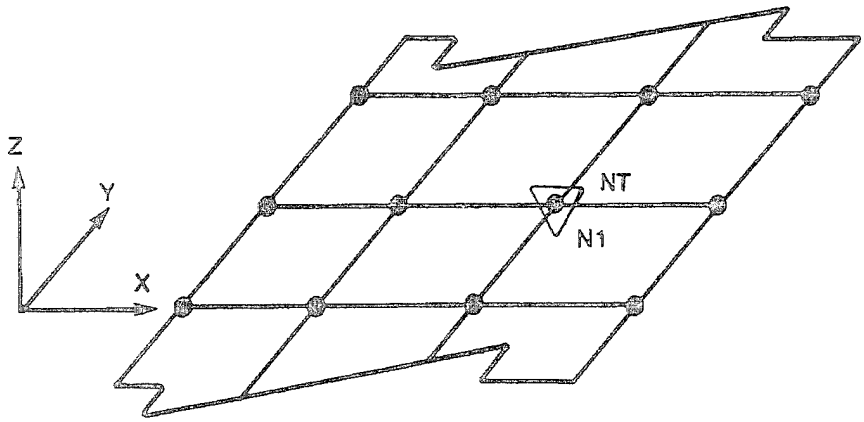

FIGURE 3-3.16 Definition of Nodal Temperature

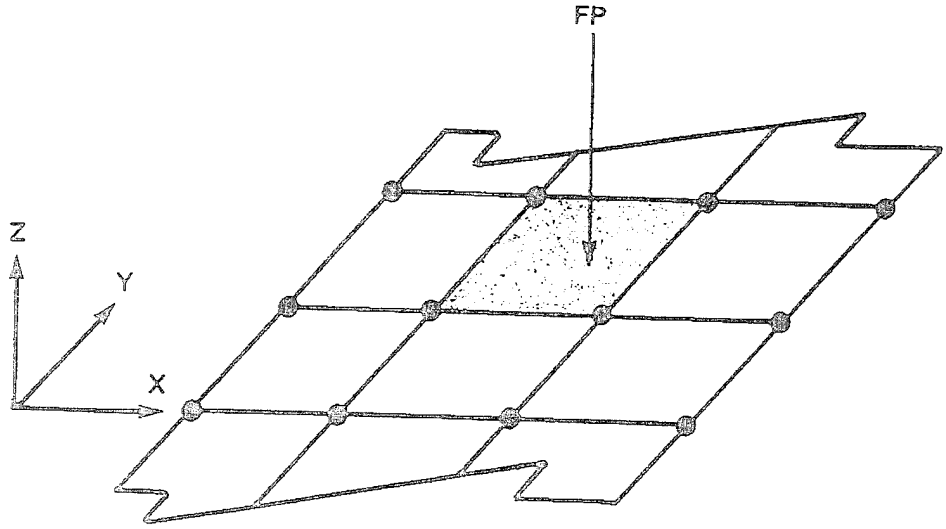

FIGURE 3-3.17 Definition of Face Pressure

3.4.8 Loads - Edge Loads

An edge load is the combination of the forces and moments that can be applied to the edge of an element as shown in Figure 3-3.18. The types of edge loading depend on the type of element. An edge load can be applied to beam elements as:

1. axial force
2. shear force
3. torque
4. bending moment.

Uniformly distributed loads on beam elements can be handled exactly and no further subdivision of the beam element is required to improve the representation of the load.

For membrane elements edge loads can be applied as in-plane forces, and for plate bending elements both in-plane and out-of-plane forces can be applied along with bending moments.

3.4.9 Loads - Thermal

A beam temperature is the temperature at the centroid of the beam's cross section and is applied as temperature, Y axis gradient or Z axis gradient in degrees as shown in Figure 3-3.19.

Most programs allow for input of thermal loading directly on elements. Others permit, in addition, specified nodal temperature and temperature-dependent material properties.

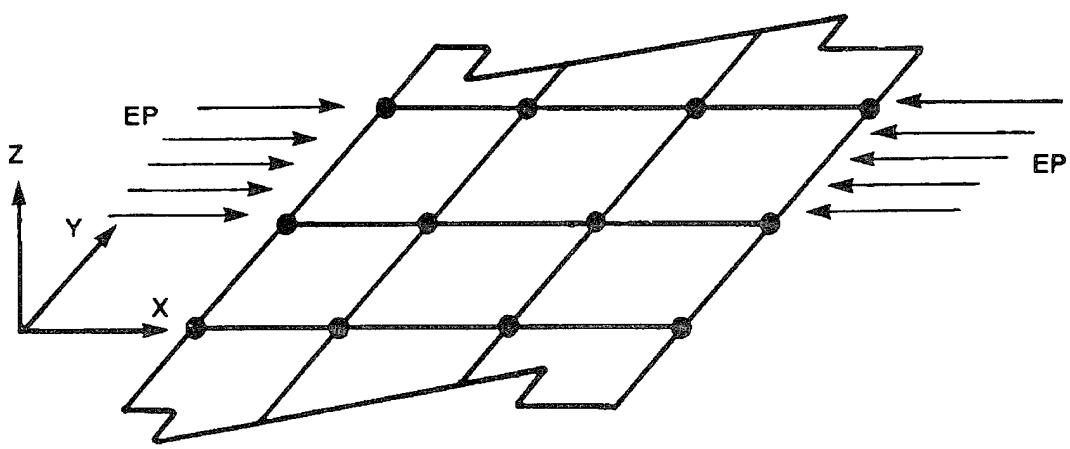

FIGURE 3-3.18 Definition of Edge Pressure

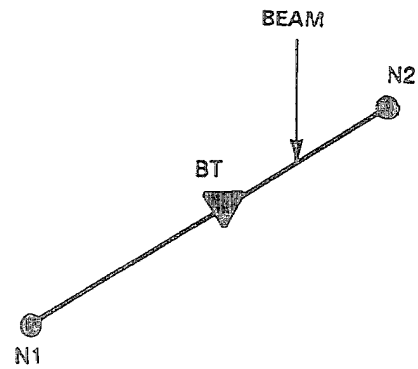

FIGURE 3-3.19 Definition of Beam Temperature

3.4.10 Gravity and Acceleration

Inertial loads are generated as a result of the body accelerating. A special case is the self weight of a structure, or body, which is generated by the acceleration due to gravity.

Inertial loads are generated as a result of one or more of the following:

1. translational acceleration
2. angular velocity
3. angular acceleration

FEA software systems treat weight data in different ways. It is important therefore, particularly for dynamics problems, to be aware of the way in which the system treats mass, and gravitational forces.

3.5 Solution Options and Procedures

3.5.1 Static Analysis

Static analysis is used to determine the displacements, stresses, strains, and forces in structures due to loads that do not induce significant inertia and damping effects. The loads and the structure's response are assumed to vary slowly, if at all, with respect to time. The primary application of FEA in ship structures is in support of design and this usually involves static analyses. These may range from global models encompassing the whole ship, to very detailed local models. Apart from FEA performed in support of design, static analysis is also used in the investigation of certain types of strauctural failures.

3.5.2 Dynamic Analysis

Dynamic analyses in ship structures are usually performed for the following reasons:

1. To ensure that the natural frequencies of sensitive structures and components do not coincide with those of the hull girder or with the forcing frequencies associated with propellers and other mechanical sources of vibration energy.
2. In preparation for dynamic response computations.

Several quasi-static design procedures have been developed for design against dynamic load conditions. For some of these procedures, for example the Design Response Spectrum Method used for shock analysis, it is often necessary to compute several tens of natural frequencies of the subject structure or component. In complex structures such as masts the natural frequencies and modes can usually only be calculated using FEA.

As an alternative to quasi-static procedures, more rigorous dynamic response calculation may be used. Two methods are available: direct integration of the equations of motion, or the superimposition of modal responses. For nonlinear behaviour, such as that associated with large deflections and/or plasticity, only the former is appropriate.

Transient dynamic response analysis is used primarily for computing response to suddently applied loads and/or short duration loads. Examples include forces due to collisions, wave slamming, and shock and blast. In these cases the loading is very uncertain. Various procedures have been developed to compute loads from these types of loading. For example procedures are available to model the shock forces generated as a result of underwater explosions. The procedure models the underwater explosion, the pressure induced on the hull, and finally the transmission of the dynamic forces through the hull structure to the structure or component in question. Many transient dynamic problems involve fluid structure interaction phenomena where the structural response affects the loading on the structure. Sometimes it is possible to treat such phenomena very approximately by adding a certain amount of fluid mass to the elements adjacent to the fluid.

3.5.3 Buckling Analysis

Depending on the structural element, the estimate of buckling load can be very sensitive to the inevitable presence of discontinuities, imperfections and residual stresses. The application of FEA techniques to solving buckling problem should be approached with caution. The results can be very sensitive to assumptions made in regard to deviations from the ideal, more so than is typical for linear static analysis The usual practice in design situations is to adapt classical solutions to the problem.

4.0 FINITE ELEMENT RESULTS CHECKS

The results obtained from a finite element analysis (FEA) should always be verified, and their validity established. To make sure that the results are devoid of any errors in modelling or analysis, it is necessary to perform the checks outlined in this section. These checks ensure that the FEA results are calculated, processed, and presented consistently with the analysis requirements.

4.1 General Solution Checks

Many of the following checks can be performed using the graphical display features available with most FEA software systems. Where such features are not available, these checks will have to be performed by examining printed results output.

4.1.1 Errors & Warnings

Well established finite element software systems generally have several built in checks to identify poor modelling and analysis practices. A warning or an error message is issued when built in criteria are violated. The correct practice is to resolve any such messages and take the appropriate remedial action. If the warning/error message is not applicable to the analysis, proper justification should be provided. An example could be a warning message for angle between adjacent edges in a quadrilateral shell element. The generally recommended range is between 45°and 135°. If this rule is not followed, valid justification could be that the element in consideration is located well away from the area of interest.

4.1.2 Mass and Centre of Gravity

It is good practice to verify the mass of the model and the location of the model's centre of gravity of the model. Several programs provide the mass without the need for a full analysis. If this option is unavailable, the analysis could be run with a 1G loading (with no other applied loads).

4.1.3 Self-Consistency

The results should be checked for 'self-consistency'. For example, displacements at fixed supports should indeed have zero displacements, and any symmetries in the model should be reflected in the stress and deflection results.

4.1.4 Static Balance

This is a fundamental check. The applied loads should be compared with the reactions. The check should include moments where appropriate. This check ensures that the applied loads and reactions are in balance, and ensures that the user specified loading definitions are properly interpreted by the program. When the applied loads and reactions are not in balance this is an indication of a serious error.

Checking the forces and reactions also ensures that the results are actually for the intended load. In the case of pressure loads, due to possible discrepancies in arriving at nodal forces from pressures, the actual load level could be different from that intended.

4.1.5 Defaults

All FEA software packages have built-in defaults. For certain input parameters default values or options are assumed if a value has not been input, or if an option has not been selected. Hence, checks should be performed to ensure that where defaults have been used, they are consistent with the assumptions of the analysis.

4.1.6 Checklist

The following is a list of checks to ensure the quality of the FEA. The checklist cover both prerun and postrun checks.

1. Pre-Run Checks - Graphical:

    a. Extremities of model - global dimensions OK
    b. Free edges - look for element connectivity
    c. Shrunken elements - no missing elements
    d. Duplicate nodes
    e. Duplicate elements
    f. Size of adjacent elements - avoid ill-conditioning
    g. Mesh density
    h. Mesh transitions
    i. Plot material properties by colour
    j. Plot physical properties by colour
    k. Loads applied to correct elements
    l. Direction of loads correct
    m. Boundary conditions applied to correct nodes

2. Post-Run Checks:

    a. Static balance
    b. Comparison
        i. classical results
        ii. simple finite element model
    c. Numerical accuracy
        i. residuals
        ii. stiffness ratio

4.2 Postprocessing Methods

Methods used for postprocessing of derived quantities from a FEA should be explained. The derived quantities include parameters such as stresses, design margins, factors of safety, etc.

The need and justification for applying correction factors for FEA results should be explained. The need for applying correction factors may arise due to the necessity to compare FEA results with design codes.

4.3 Displacement Results

In the design of ship structures the primary result parameter of interest is stress. Most design criteria are expressed as allowable stresses. Although deflection criteria are not as numerous as stress criteria in design codes and standards, they can be just as critical. Stiffness requirements for various components of navigation and combat systems are often quite onerous. Stiffness requirements are often related to dynamic requirements in which the coincidence of equipment operating frequencies and those of the equipment-support structure system is to be avoided. As noted elsewhere, modelling for dynamic analysis is considerably more difficult than modelling for static analysis. This is particularly true for higher modes of vibration.

In interpreting displacements, it is essential to have an understanding of the accuracy of the FEA, how they vary for different response parameters, and the influence on accuracy of modelling decisions made earlier.

In general, displacements are more accurately determined by FEA than stress.

The methods used for plotting the displacements of framed structures and certain plated structures in many FEA software packages may understate the actual accuracy. Beams are often plotted as straight lines. In reality the displacement function for beam elements is a cubic polynomial. The same observation applies to plate bending elements.

In general, displacements in structures composed of beam and truss elements are accurately predicted within the limitations of the engineering model. In terms of the finite element model doubling the number of beam elements in, say, a grillage will not improve the accuracy of the result.

The response of two and three-dimensional structures is much more complex and hence, in general, displacement results are sensitive to the fineness of the mesh. Therefore interpreting displacement results in plated and solid models require more care. Gross errors are generally uncovered by the application of intuition and knowledge of previous analyses and physical experiments. More subtle errors are more difficult to uncover.

4.4 Stress Results

As noted earlier, stresses are more difficult to predict accurately than displacements. Limitations in the finite element method are such that stresses are not normally continuous across boundaries between elements. For ease of interpretation of results, most FEA software averages stresses in some fashion before presenting the results. These results are presented attractively as stress contours in colour plots, and the underlying discontinuous nature of the stresses may be obscured as a result of averaging processes, thus engendering a false sense of confidence in the results.

These problems can be compounded by misunderstandings in regard to the type of stress being plotted.

Stress contours provide a good qualitative indication of the adequacy of the density of the mesh. Smoothly changing contours usually indicates that the mesh is suitably fine. Alternatively, stresses in adjacent elements can be compared. It is difficult to give firm qualitative guidance since the accuracy required depends on the nature of the analysis. A change in stress of more than +/- 20% would be regarded as unsatisfactory for design purposes.

4.4.1 Stress Components

The unknowns solved for in FEA are displacements (translations and rotations). These displacements are then used to calculate strains in the element, and hence the stresses. For some element types intermediate steps are involved. The nature of inter-element stress discontinuities depends on the element type concerned.

In one-dimensional elements such as truss and beam elements, there are no discontinuities because the displacement functions are sufficiently detailed. For example, the standard beam element is based on cubic displacement and hence can represent linear variations of bending moment.

Two and three-dimensional lower order elements generally have discontinuities in the stress field at element boundaries unless they are in a constant stress field. For plane and solid elements, stresses depend on displacement derivatives, and on curvature for plate bending elements.

The stress state at a point is defined by several stress components depending on the element type. These are summarized in Table 3-4-1.

ELEMENT TYPE	STRESSES
Truss	σ_x
Beam	σ_x, τ_y, τ_z
Plane Element	σ_x, σ_y, τ_{xy}
Plate Bending	σ_x, σ_y, τ_{xz} (Top & Bottom)
Solid	σ_x, σ_y, σ_z, τ_{xy}, τ_{yz}, τ_{xz}

TABLE 3-4-1 Stresses Represented by Element Type

The state of stress in plated and solid structures is generally quite complex, and has to be combined in some way for design situations. Many failure theories have been developed wherein "failure" is said to have occurred when some equivalent stress exceeds the yield stress. The equivalent stress combines all the stresses acting at a point in the material. The most popular of these is the Von Mises stress which is given by:

$$\sigma_e = \frac{1}{\sqrt{2}}\left[\left\{(\sigma_x-\sigma_y)^2 + (\sigma_y-\sigma_z)^2 + (\sigma_z-\sigma_x)^2\right\} + 6\ (\tau_{xy}^2+\tau_{yz}^2+\tau_{zx}^2)\right]^{1/2}$$

The use of the equivalent stress for checking the critical buckling stress is not appropriate. For buckling checks, normal stress (σ_x,σ_y) and shear stress (τ_{xy}), as appropriate, should be used. Generally normal stresses will not be uniform across the panel. Where this is the case, it will be necessary to approximate the stress by a linear distribution for which there are standard buckling formulae. In some cases, the stress state may be biaxial and/or there may be significant shear stresses. To check these situations, it is usual to calculate the ratios of actual stress and critical stress for individual stress states, and combine the effects using interaction formulae.

4.4.2 Average and Peak Stresses

Except for the one-dimensional elements, each stress component for each element meeting at a node will be different. In FEA programs various techniques have been developed to average stresses. The stresses in four adjacent membrane elements may look something like the distribution depicted in Figure 3-4.1.

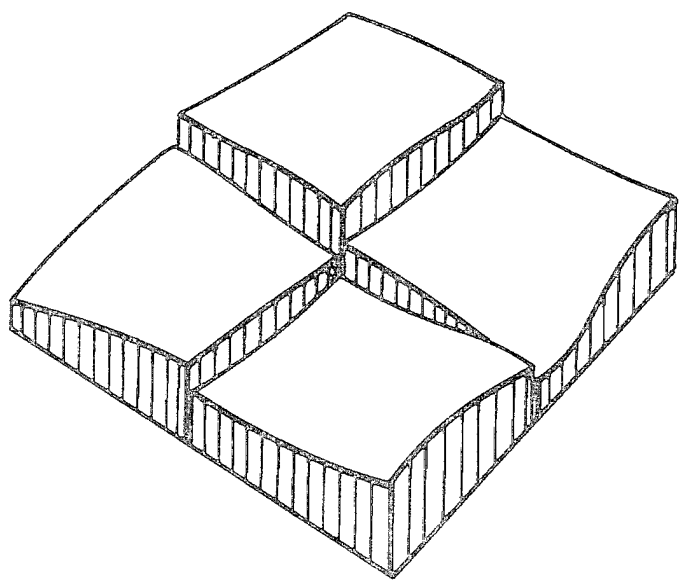

FIGURE 3-4.1 Distribution of Element Stresses

Stresses can be calculated at any point in the element. It has been shown, however, that depending on the element formulation there are optimal points for computing stresses. In general, stresses are least accurate at corners, more accurate at mid sides, and most accurate at certain interior points. For two and three-dimensional elements based on the isoparametric formulation (by far the most popular) these interior points

are the so-called Gauss points (integration points). One popular method is to extrapolate the stresses calculated at the Gauss points to the nodes using a more suitable formula than the actual interpolation functions such as, for example, least squares. However, in some FEA software, the values at the Gauss points are copied to the nearest node without extrapolation, unless otherwise instructed. There are yet other methods for estimating nodal stresses.

Once the nodal stresses have been calculated for all elements contributing to the node, they can be averaged to yield an average nodal stress. This will be done for all appropriate stress components. Averaged nodal stresses are much more reliable than element nodal stresses, although the extent of the stress discontinuity at the nodes should decrease with mesh refinement.

The different methods used by FEA software systems for extrapolating Gauss point stresses to the nodes is perhaps the main reason analyses of the identical problem, using different systems, can yield identical displacement results yet differing stress results. One technique used to overcome this problem is to employ dummy line elements in critical regions of structure. In this technique a dummy truss element is included in the model in the area of interest. An example of such a situation is the placement of such an element at the edge of an opening. The stress results from the truss element are directly calculated and are not dependent on extrapolation. The area of the truss element should be small enough to have negligible influence on response. An area of $t^2/100$, where t is the thickness of the plate, is a reasonable upper bound. The use of such elements in the interior of plated structure, or indeed any structure, should be undertaken with caution. Line elements will yield only normal stresses in the direction of the axis of the element. In general line elements will not be aligned with the direction of principal stress.

The current popularity of producing smoothed stress fields in stress plots have hidden dangers. It hides large disparities in stress in adjacent elements. Large disparities indicate too coarse a mesh. A more revealing plotting technique is stress contours. These should be smooth and not jagged. It is evident from Figure 3-4.2 that the contours in the coarse mesh are not smooth. This might be regarded as an unacceptably coarse mesh. An even more revealing method with modern postprocessing systems is stress isoband plots. These plots will show a "checkerboard" type of distribution for unacceptable stress distributions.

The stress results from a FEA undertaken in support of design are often plotted in terms of Von Mises stresses, although principal stresses and component stresses are also sometimes plotted. There are two potential pitfalls that should be guarded against in interpreting stresses:

1. At nodes on boundaries between membrane elements of different thickness stresses, of course, cannot be simply averaged. A check should be made to ensure that the software does not perform averaging blindly in such a configuration.

2. Care should be taken in interpreting stresses at nodes where two-dimensional elements are not in the same plane. Clearly simple averaging is not appropriate.

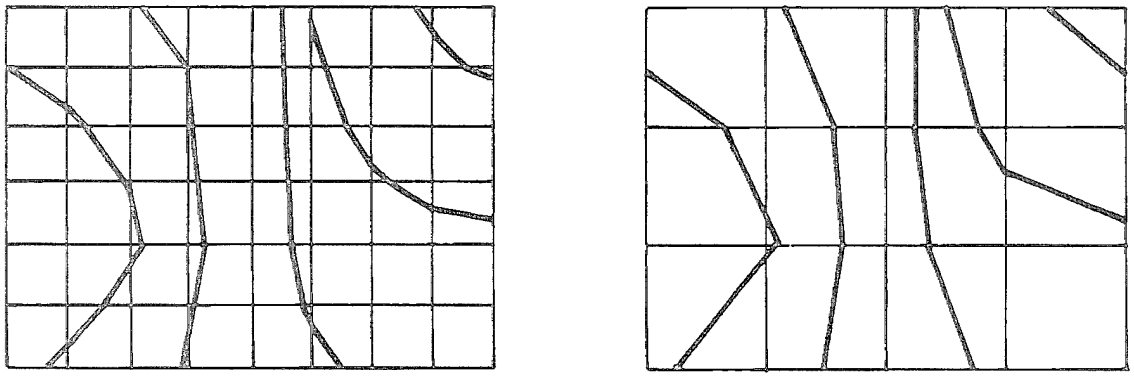

FIGURE 3-4.2 Stress Contours in Coarse and Fine Meshes

4.5 Other Results

4.5.1 Natural Frequencies and Modes

A feature of the finite element method is that the lower vibration modes are more accurately determined than higher modes. The curvatures in structures in higher modes are more severe than at lower modes, and several masses are required to represent the kinetic energy accurately at higher modes. These features conspire to make the accurate prediction of higher modes difficult.

In assessing the results from a dynamic analysis, a good starting point is the value of frequency. As an approximate guide, the following may be used for the first few modes:

1. Hull Girder	1- 5 Hz
2. Main Mast	5 - 10 Hz
3. Superstructure	10 - 20 Hz
4. Typical Stiffened Plate Decks	10 - 40 Hz

The reliability of higher vibration modes can be assessed by considering the number of masses represented in the lobe of a mode shape. Figure 3-4.3 illustrates this idea.

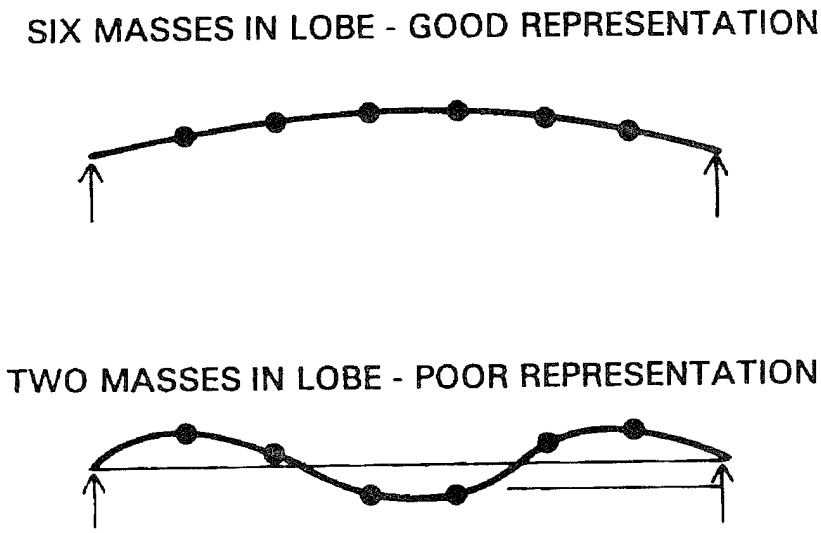

FIGURE 3-4.3 Assessing Accuracy of Higher Modes

5.0 CONCLUSIONS CHECKS

This section deals with the final phase, conclusions and recommendations, of a finite element analysis (FEA). It is necessary to perform these checks to ensure that the loading, strength, and acceptance criteria are considered in arriving at the conclusions. This is a critical aspect of a finite element analysis since engineering decisions will typically be based on recommendations contained in this section. The following sections are grouped into five subsections dealing with various aspects of FEA conclusions.

5.1 FEA Results and Acceptance Criteria

A statement confirming that all analysis procedure quality assessment checks have been executed satisfactorily should be included.

Finite element analysis is an approximate solution technique, and, in spite of careful effort, the results can only be approximations of the real solution. Therefore, the FEA results should always be validated using an alternative method/s. Alternative methods include comparison with experimental data, approximate analytical models, text book and handbook cases, preceding numerical analyses of similar problems, numerical analysis of a related but simpler problem, and results for the same problem predicted by a different program (which could be based on a different numerical method). Many closed-form solutions of structures with simple geometry are available in handbooks and manuals, which could provide a good means for comparison. Numerical analysis using FEA of similar but simpler models could also be used for comparison An example could be the use of a grillage model to check the results of a finite element model of typical deck structure.

Despite the remarks made in the previous paragraph the results from alternative solution methods should also be treated cautiously. Analytical models incorporate idealizations, mistakes may be made in the calculations, textbooks and handbooks may contain errors, numerical solutions are subject to errors in coding and in data preparation, and experiments may be improperly performed and the results misinterpreted. Therefore, when the FEA results do not compare well with alternative methods, the possible reasons should be investigated.

The results should be presented so that they can be easily compared with the design/acceptance criteria. Finite element analysis results are identified based on node numbers and element numbers. These should be translated into the actual physical problem. For example, in a lattice mast, the members that do not meet the safety requirements should be highlighted on a figure of the model for easy identification.

When the FEA results do not meet the acceptance criteria, possible reasons should be explored and documented. In case of large deviations, further justification regarding the validity of the FEA results should be provided.

The results should be assessed based on the knowledge of the physical problem. For analyses of high category of importance, an independent assessment should always be done by a qualified and experienced person.

5.2 Load Assessment

In case of discrepancies in the results, the loading applied to the model should be reviewed as part of the investigation into the source of the problem. The appropriateness of the types of loads, load cases, magnitudes, directions, load combinations, load factors, boundary conditions, etc., should be reviewed.

The loads applied to a finite element model are approximations of the actual loads. The contractor should provide a general description on the method used to approximate the actual loads. If the load distribution is simplified to a more regular or uniform distribution, this should be justified to ensure that the simplified load distribution closely approximates the actual distribution in magnitude and direction. For example, if concentrated forces, at nodes, are used to approximate a pressure distribution, the calculations used in assigning the values of nodal forces should be explained. When concentrated forces are used to duplicate pressure, it is important that the load is applied such that the resultant acts through the centre of pressure.

Details on load factors used in the analysis should also be provided. The information on whether the loads are based upon serviceability limit states or ultimate limit states should also be provided.

Finally, an assessment of the accuracy of the applied loads should be used in describing the results from the analysis.

5.3 Strength/Resistance Assessment

In design situations using traditional methods the practice is to apply a nominal design load to the structure and compare the computed stress with some allowable stress. The latter is usually some fraction of the yield stress or the theoretical buckling stress.

In the modelling process several assumptions are made which may, or may not be, conservative. An assessment of the conservatism, or otherwise, should be made particularly in regard to the underlying assumptions implicit in the design criteria that are being applied. Often design criteria have evolved with design methods based on hand calculation. Different design criteria may be approrpiate if FEA is used to compute stresses. This factor should be included as part the strength/resistance assessment.

In making an assessment of the strength/resistance of the structure based on the results of a FEA, appropriate allowances should also be made for factors that were not accounted for in the analysis. Some of these factors include geometric and material imperfections, misalignments, manufacturing tolerance, initial strains, and corrosion. The design criteria being applied may implicitly include an allowance for some, or all, of these factors.

5.4 Accuracy Assessment

In assessing the accuracy of FEA results, factors to be considered include: the level of detail and complexity modelled, type of behaviour modelled, mesh refinements, etc. In deciding the level of detail the analyst would necessarily have omitted some elements

of the structure. The effect of these on the results should be assessed. The limitations of the element type/s used should also be assessed with respect to its capacity to model the required behaviour. For example, the element type used might model only the membrane actions when both membrane and bending behaviour are significant. The joints and connections between members might not be properly detailed in the model, making the model behave in a significantly different way. The effect of the mesh density used on the results should also be assessed. Simple parametric studies on smaller models may sometimes be necessary to assess the accuracy of the mesh used in the model.

Performing checks on the numerical accuracy of an FEA is difficult. Generally reliance is placed on a combination of following good modelling practice and on parameters output by the FEA program. Common parameters output include the ratio of the largest and smallest stiffness found in the stiffness matrix, and the so-called *residuals*. Unfortunately, satisfactory values for these parameters are necessary, but not sufficient, conditions for satisfactory numerical performance.

The acceptability, or otherwise, of the ratio of the largest to smallest stiffness depends on the computer hardware and software and it is suggested that the guidance provided by the warning and error messages issued by the FEA program are heeded.

5.5 Overall Assessment

All of the above described factors should be used in conducting an overall assessment of the FEA. The results of this overall assessment should be included as part of the documentation. Deviations, if any, from the actual response should be justified.

Recommendations, if any, for future FEA should be clearly stated. If there is an anticipated continuation for the project at a later date, information on all computer files, documentation, etc. should be documented.

PART 4
BENCHMARK PROBLEMS FOR ASSESSING FEA SOFTWARE

1.0 INTRODUCTION

The assessment methodology presented in Part 2 includes a requirement that suitable FEA software be used. The determination of the suitability of a particular FEA code should involve, among other things, an assessment of its capability to analyze the types of problems that will be applied. This part describes the development and application of a series of standard benchmark test problems that can be used to assess the suitability of new, or significantly modified, FEA software for ship structure analysis.

As a means of qualifying FEA software, the benchmarks represent a category of test between that of large scale validation efforts and that of smaller scale verification problems. The actual structural behaviour of even the simplest component depends on such a large number of variables of varying complexity, that isolating the response modelled by FEA codes is extremely difficult. As such, large scale validation of FEA software is typically very complex and expensive, often requiring comparison of FEA predictions with physical test results. Although such validation testing may be a requirement for certain critical structure applications, it is not a practical approach for assessing FEA software on a routine basis.

Most FEA software developers perform verification tests as part of their internal quality assurance procedures. For example, the verification test set for the ANSYS FEA program consists of over 5500 test cases at revision 5.1. Some software developers publish and / or make available a subset of the tests in the form of examples or verification manuals. Other developers include "text book" verification examples in their marketing media. Verification problems of this sort are usually simple and small-scale in character and typically have closed-form theoretical solutions. They are generally designed to test a very specific aspect of the FEA code, such as the numerical performance of a certain type of element in a certain geometry, loading condition and type of analysis. However, the verification problems rarely resemble "real life" engineering problems involving irregular geometries with large numbers of element types, in various shapes and sizes, combined with several load types and boundary conditions. Thus, while verification problems of the type described above are a necessary step in verifying and validating FEA software, they are not sufficient on their own.

The benchmark problems presented here are intended to represent the next step in ensuring that the candidate FEA software is appropriate for the FEA of linear elastic ship structure. The benchmarks are summarized in Table 4.1-1 and cover a range of typical problems and requirements encountered in "real life" ship structure FEAs. The problems involve simple configurations of a number of representative ship structures, but are detailed enough to retain the key characteristics of the structural assembly or detail. The problems typically require that several types of elements, materials, and loads be used in combination. An attempt has been made to design the benchmarks such that, collectively, all key features that determine the quality of FEA packages are

addressed. The benchmark problems are described in Part 4, Section 2.0 with complete details given in Appendix D.

The benchmarks are designed to exercise the FEA software rigorously without making the evaluation process overly demanding. The problem size has been limited to a maximum of 200 nodes to ensure that the process of benchmarking new and modified software is not onerous. The 200 node limit should also allow, in some cases, for the user to test demonstration or evaluation versions of FEA software. Such versions are usually based on the "full" versions of the FEA code, but typically have limits on the number of nodes and elements that can be modeled. These are usually available from the FEA software developer at a small nominal fee to allow testing and evaluation prior to making a larger financial commitment.

The benchmarks do not have closed form theoretical solutions. Instead, the results from analyzing the benchmark problems using three well known FEA software programs are used to establish the reference benchmark results. The three programs used were ANSYS, MSC / NASTRAN, and ALGOR and are described in Part 4, Section 3.0. Presentation and discussion of the benchmark results is included in Appendix D.

Care has been taken to ensure that the test models for the benchmark problems are sufficiently detailed or refined that the results approach a converged solution. Element formulations, stress averaging / extrapolation algorithms, and other aspects of FEA software performance tend to be optimized for ideal configurations. Testing different FEA software of an ideal configuration (e.g. a rectangular plate with uniform rectangular elements) will tend to give virtually identical results. However once the FEA model deviates from an ideal configuration, as is the case for the benchmarks, differences in the results manifest themselves. In these circumstances the rate of convergence of results from different FEA programs may differ. Ensuring that the results obtained by the test models are near a converged solution should minimize any discrepancies that can be attributed to poor mesh design of the benchmark test models.

New, or significantly modified, FEA software can be evaluated by exercising the software with the benchmark problems and comparing the results obtained with the reference benchmark results. The process by which this should be accomplished is presented in Part 4, Section 4.0.

WARNING

The benchmark problems and associated FEA models presented in this document are intended for the express purpose of evaluating FEA software for ship structural analysis applications. While attempts have been made to ensure that the FEA models follow good modelling practice, they should not necessarily be regarded as appropriate for any other purpose than that for which they are intended.

Features		Benchmark Problem				
		BM-1 Reinforced Opening	BM-2 Stiffened Panel	BM-3 Isolation System	BM-4 Mast	BM-5 Bracket Detail
Analysis Types	2D	●				
	3D		●	●	●	●
	Static	●	●		●	●
	Modal		●	●	●	
Element Types	Mass			●	●	
	Spring			●		
	Truss / Spar				●	●
	Beam			●	●	
	Membrane	●				
	Shell		●			●
	Brick					
Load Types	Force	●			●	
	Pressure		●			
	Acceleration				●	
	Displacement					●
Boundary Conditions	Displacement	●	●	●	●	●
	Symmetry	●	●			
Results	Displacement	●	●		●	●
	Reactions				●	●
	Stress	●	●		●	●
	Frequency		●	●	●	

TABLE 4.1-1 Summary of Ship Structure FEA Benchmark Problems

2.0 THE BENCHMARK PROBLEMS

The ship structure FEA benchmarks include the following problems :

1 - Reinforced Deck Opening
2 - Stiffened Panel
3 - Vibration Isolation System
4 - Mast
5 - Bracket Detail

Table 4.1-1 summarizes the main modelling and analysis features that the benchmarks are intended to test. The following sections provide a summary description of the benchmark test problems. Complete details of the benchmark problems are presented in Appendix D.

2.1 BM-1 Reinforced Deck Opening

Openings and penetrations are among the most commonly encountered sources of high stress levels in surface ship structures. In most cases, the openings are reinforced by coamings or insert plates to attenuate the resultant stress concentrations. FEA may be required to evaluate the stress levels and the effectiveness of the reinforcement technique. This benchmark tests the capability of FEA packages to analyze this category of ship structure problem and is shown in Figure 4.2-1. The benchmark tests the FEA programs capability to analyze a plane stress concentration problem using either 4-node or 8-node shell elements. However, it goes beyond the classical hole-in-a-plate problem by including two plate thicknesses for the deck and the reinforcement insert plate, and by including stiffeners in the plane of the deck.

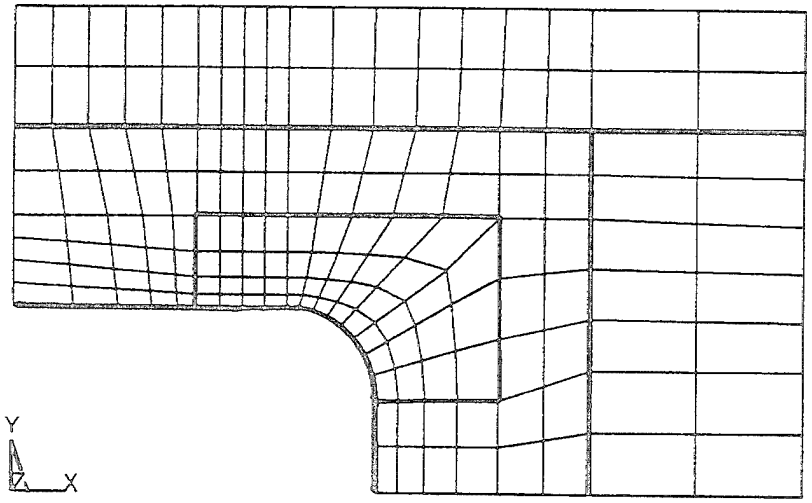

FIGURE 4.2-1 Benchmark Problem BM-1 : Reinforced Deck Opening

2.2 BM-2 Stiffened Panel

Stiffened panels are the most common structural component in ships. This benchmark tests the capability of FEA packages to analyze this type of structure using various plate and stiffener element modelling techniques. These include :

a) 4-node shell elements for plate and in-plane beam elements for stiffeners.

b) 4-node shell elements for plate and off-set beam elements for stiffeners;

c) 4-node shell elements for plate and stiffeners; and

d) 8-node shell elements for plate and stiffeners;

Both static and modal analyses are conducted for each model. The static analysis involves surface pressure loading causing out-of-plane panel bending under symmetric boundary conditions (i.e. quarter model). The modal analysis tests the programs capability for calculating natural frequencies and mode shapes under symmetric and antisymmetric boundary conditions.

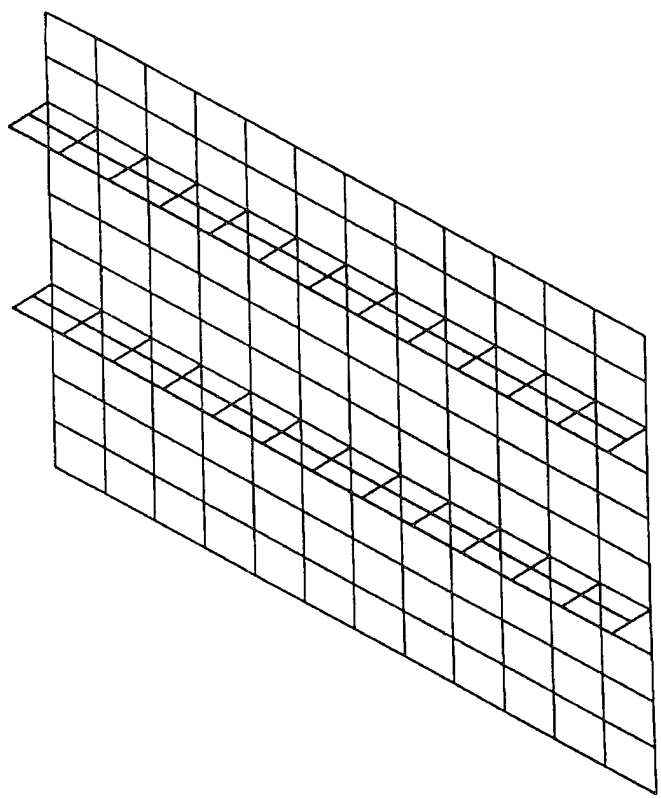

FIGURE 4.2-2 **Benchmark Problem BM-2 : Stiffened Panel**

2.3 BM-3 Vibration Isolation System

Vibration isolation systems are often required for ships equipment and machinery. FEA analyses may be used to optimize the isolation system and ensure that vibration and shock design criteria are achieved. This benchmark considers a 12 degree of freedom system consisting of a generator which is mounted and isolated on a raft structure which is, in turn, isolated from the foundation structure. The problem is summarized in Figure 4.2-3. Some of the key testing features include of this benchmark include :

- Modal analysis;
- Point mass including rotational inertia terms (to model generator)
- Spring elements with stiffness in three directions; and
- "Rigid" beam elements connecting generator mass and isolator springs to raft.

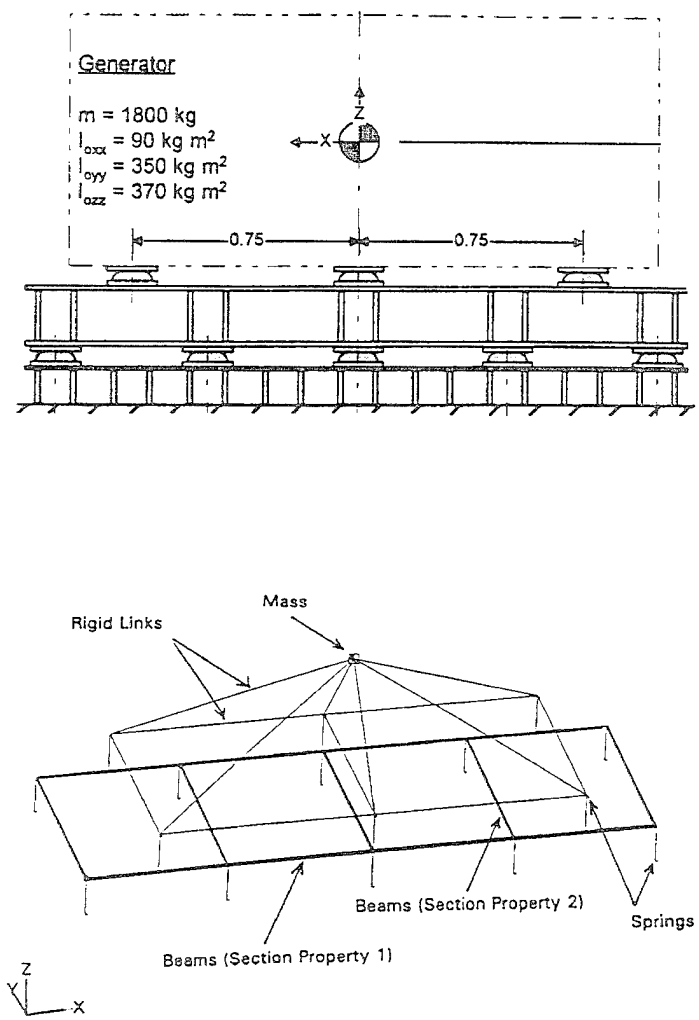

FIGURE 4.2-3 Benchmark Problem BM-3 : Vibration Isolation System

2.4 BM-4 Mast Structure

Mast structures on ships must be designed to withstand environmental loads (wind and ship motions). Masts on naval ships usually have additional requirements for resisting shock and blast loading. The mast benchmark problem is summarized in Figure 4.2-4 and the key modelling and testing features include :

- Beam elements (with axial and bending stiffness) for main legs and polemast;
- Axial line elements (spar, truss, rod) for braces;
- Point mass elements for equipment "payloads";
- Inertial loading in three directions combined with nodal force loading;
- Two materials (steel and aluminum);
- Modal analysis.

While the benchmark problem is that of a lattice mast structure, it can be used to assess the FEA programs capabilities for modelling similar frame or truss like structures such as booms and derricks, especially where beam and spar elements are used in combinations.

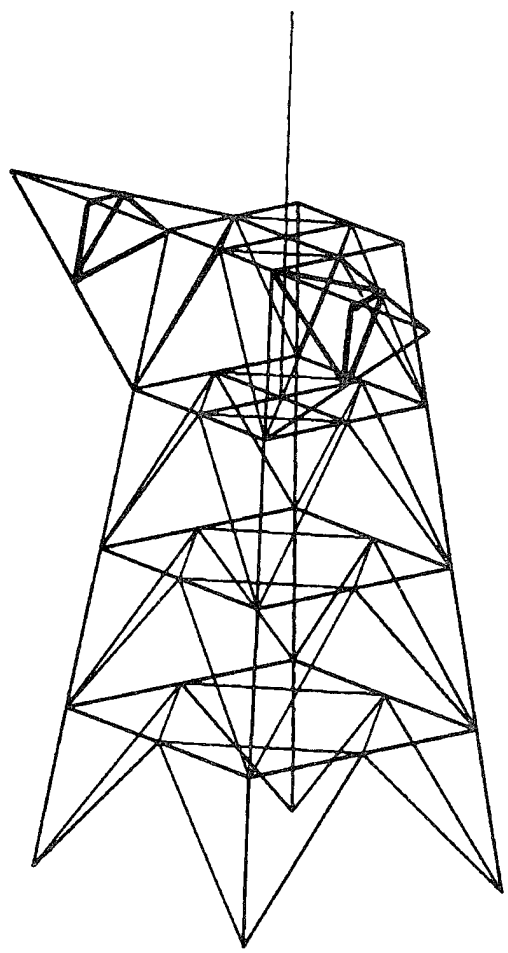

FIGURE 4.2-4 Benchmark Problem BM-4 : Mast Structure

2.5 BM-5 Bracket Connection Detail

Welded connection details on ships are subject to fatigue loading. Poorly designed or constructed details can lead to premature fatigue failure. Finite element methods are frequently used to calculate fatigue stresses and to aid in the development of improved detail geometry and configurations. This benchmark problem is summarized in Figure 4.2-5. Some of the key modelling and testing features of this benchmark include :

- 3-D geometry with shell elements of varying thicknesses;
- Axial line elements for bulkheads, deck and flange of bracket;
- Transition from coarse to fine mesh at the bracket weld;
- Prescribed non-zero nodal displacement boundary conditions.

The latter feature was included since in many cases the boundary conditions for a detail FEA are obtained from displacements and loads derived from a global FEA.

This particular bracket detail problem is complicated by the existence of a stress singularity at the end corner or toe of the bracket. In a linear elastic analysis, the stress at this point is theoretically infinite. Refining the finite element mesh gives progressively higher stresses which are meaningless. One method which is commonly used to get around this problem is to use the so called "hot spot" stress. In calculating the hot spot stress no account is taken of the weld geometry, and in an idealised finite element representation (ignoring the weld) the stress is equal to the value at about one plate thickness from the corner (Chalmers, 1993).

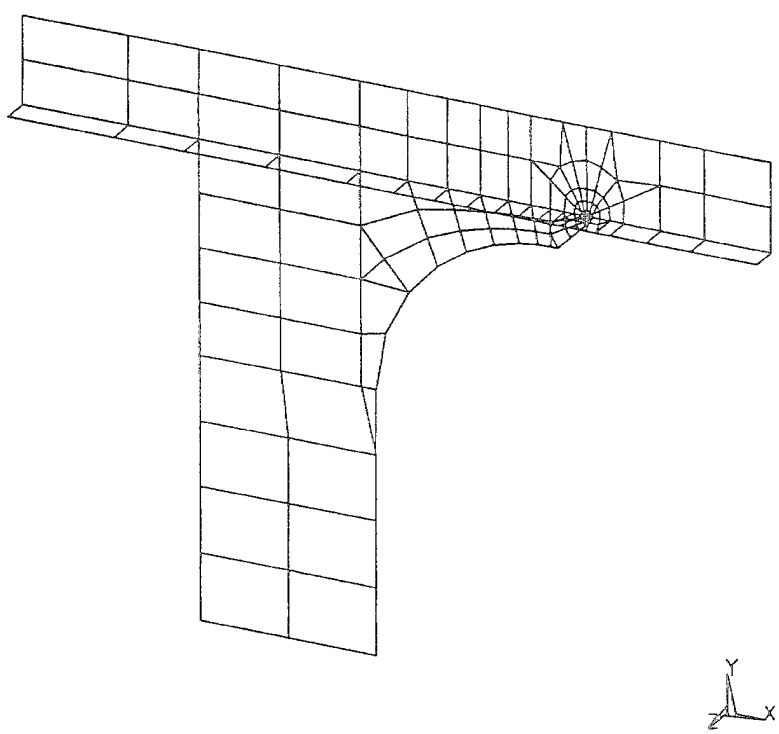

FIGURE 4.2-5 Benchmark Problem BM-5 : Bracket Detail

3.0 THE BENCHMARK TEST FEA PROGRAMS

As previously mentioned, the benchmark problems do not have readily obtainable theoretical solutions. Instead, the results from analyzing the benchmark problems using three well known FEA software programs are used to establish the reference benchmark results. The three programs used were ANSYS, MSC / NASTRAN, and ALGOR.

The ANSYS FEA program is developed-and marketed by ANSYS Inc. of Houstan, PA. ANSYS is a mature, general purpose FEA program that has been commercially available on various computer platforms since 1970. It includes extensive analysis capabilities, a large, comprehensive library of elements, and extensive pre- and post-processing capabilities. The ANSYS Version 5.1 program was run on a DEC 3000 workstation for the benchmark test cases.

The MSC / NASTRAN FEA program is developed and marketed by The MacNeal-Schwendler Corporation, Los Angeles, CA. Traditionally it has been most widely used by the aerospace industry, having evolved from the National Aeronautics and Space Administration (NASA). MSC / NASTRAN is a very comprehensive and mature FEA program that has been commercially available for several decades. It is to some extent regarded, along with ANSYS, as the industry standard. MSC / NASTRAN For Windows 1.0 on an IBM 486 PC was used for the benchmarks.

The ALGOR FEA program is developed and marketed by ALGOR Inc., Pittsburgh, PA. It was one of the first FEA programs to be developed especially for the personal computer, and has become one of the most popular FEA programs for PC applications. The program features a relatively wide range of modelling and analysis capabilities.

4.0 APPLICATION OF BENCHMARKS FOR ASSESSING FEA SOFTWARE

The intended application of the benchmarks is to provide a methodology for assessing FEA software. This assessment consists of modelling and analyzing the benchmark problem with the FEA software and comparing the results with those obtained by the reference FEA programs as presented in Appendix D. The data files for the benchmark problems in ANSYS, NASTRAN and ALGOR formats may be obtained by contacting the Ship Structure Committee.

As was discovered in the benchmark results of the three reference FEA programs, there are liable to be differences between the results obtained by different FEA software packages. The differences may arise from a multitude of factors ranging from the numerical accuracy of the hardware and software platforms, to different element formulations, solution algorithms, and results presentation techniques, to actual errors or limitations in the FEA software. The question that arises is how much variation or deviation from the reference results is acceptable.

The authors suggest the following approach be used to judge the acceptability or otherwise of the benchmark results for any FEA software :

1. Result differences less than 2% with respect to the reference FEA software results for displacements, reaction forces, and lower mode natural frequencies are considered acceptable. The 2% limit is generally within what would normally be the required engineering accuracy for these types of problems.

2. Result differences between 2% and 5% are probably acceptable for beam and plate element stress results and higher mode natural frequencies. However the user should endeavour to ensure that there are plausible explanations when differences get much past 2%. This may involve further testing of the problem by, for example, refining the FEA mesh or switching the analysis options to / from the defaults used by the FEA program.

3. Result differences greater than 5 % should be considered as abnormal and require an explanation. If a reason cannot be found, the developer of the FEA software should be contacted and requested to investigate the difference. Where no explanation exists, the FEA software should probably be viewed as suspect for the particular type of analysis covered by the benchmark problem.

Particular attention should be paid to ensure that the proper loads and boundary conditions have been applied, and that the stress contours, deformed shape or mode shapes (depending on what is applicable) are consistent with the reference results. The user should also be sure of the default analysis assumptions and solution techniques used by the software. These can be especially important for problems where transverse shear effects need to be considered, or when performing modal analyses. The user should also be aware of how the FEA software extrapolates and / or averages plate element stress results at nodes.

The benchmarks are a necessary but by no means complete method of validating an FEA program. The benchmarks primarily check that a particular FEA code will perform and produce results that are consistent with the three reference FEA codes. However, it is strongly recommended that users of new or significantly modified FEA software become fully aware of all features and limitations of that program for the particular applications involved. This should include testing the software on simplified versions of the main problems of interest in order to build confidence in the modelling approach, choice of elements, mesh densities, etc. as discussed in Part 3, Section 1.3.

PART 5
CONCLUSIONS AND RECOMMENDATIONS

From a historical perspective the use of finite element analysis (FEA) as a technique for ship structural analysis is relatively new. In contrast to traditional ship structural analysis and design practice, the application of finite element technology to ship structural analysis is not as well established. As a result the body of experience in the application of this technology is limited. In common with most new technologies FEA is relatively unregulated in terms of the tools that are used in its practice, and the qualifications of organizations and individuals who perform the analysis. This presents a special problem for those that are required to evaluate finite element models and results.

The work presented in this report seeks to provide guidance to those that are faced with the problem of evaluating the FEA work performed by other parties. As an aid to the evaluation process a comprehensive and systematic assessment methodology is presented in this report. It is designed to be flexible in terms of the level of skill expected of the evaluator, and in terms of the size and complexity of the FEA that the methodology can be applied to.

The methodology is structured in three levels. The first level is essentially an overview checklist of features of a FEA that need to be evaluated. A more detailed checklist, based on the first level, is presented in the second level of the methodology. The third level provides guidance in narrative and illustrative form, and is structured to match the first and second level checklists. Further guidance is provided through a series of illustrative examples which show the influence of varying finite element modelling practice on FEA results. These are intended to help the evaluator in assessing the levels of accuracy that might be attained in the FEA that is being evaluated.

The proliferation of FEA software on the market presents a particular problem for the evaluator, and hence quality of the FEA software is considered to be a key element of the evaluation. While well established FEA software houses follow rigorous comprehensive quality procedures their tests tend to concentrate on small problems, particularly those for which closed-form solutions are available. Benchmark problems of the type presented in this report can be regarded as a further level of qualification. These benchmark problems are intended to test the ability of software to provide accurate solutions for structural assemblies typical of ship structures. Unlike the typical verification problem used by software houses benchmark problems consider non-ideal configurations, multiple element types, several load cases etc.

FEA codes are large and complex and hence can never be guaranteed to be free of errors. However, it is suggested that FEA software that has been thoroughly tested by the vendor at the verification example level, will, by successfully yielding solutions for the benchmark problems, provide another level of assurance that the software is fit for performing ship structure FEA.

Several recommendations are presented below for consideration:

1. The assessment methodology as presented is entirely new and can certainly be refined. This is best done by seeking feedback from evaluators of FEAs who have used the methodology.
2. The scope could be broadened to include dynamic response computation, non-linear behaviour, and composite materials.
3. The benchmarks presented in this report might be considered as a starting point for building a library of benchmark problems. These problems could also include high quality well documented experiments on ship structure assemblies.
4. On a broader front consideration should be given to the important question of design criteria for structure analyzed using FEA. Traditional structural design methods have evolved over many decades of use, and the design criteria used implicitly allow for, among other things, uncertainties associated with the structural analysis and design method used. Compared with traditional structural analysis and design methods the finite element method has quite different capabilities, and limitations. The subject of structural design criteria when the analysis is based on FEA should be the subject of investigation and research.

PART 6
REFERENCES

CHALMERS, D.W., *Design of Ships' Structures*, HMSO, London, 1993.

CONNOR, J.J. and WILL, G.T.,*Computer-Aided Teaching of Finite Element Displacement Method*, MIT Report 69, Feb. 1969.

COOK, R.D., MALKUS, D.S., and PLESHA, M.A., *Concepts and Applications of Finite Element Analysis*, Third Edition, John Wiley & Sons, New York, 1989.

GIANNOTTI & ASSOCIATES, INC., *Structural Guidelines for Numerical Analysis*, report prepared for the Department of the Navy, NAVSEA, Washington, DC., USA, 1984.

IRONS, B., and AHMAD, S., *Techniques of Finite Elements*, Ellis Horwood Limited, Chichester, UK, 1980.

ISSC, 1991, Report of Committee II.2: *Dynamic Load Effects*, Proceedings of the 11th International Ship and Offshore Structures Congress held in Jiangsu, People's Republic of China, 16-20 September 1991, Volume 1, edited by P.H. Hsu and Y.S. Wu, Elsevier Applied Science, London, UK and New York, 1991.

KARDESTUNCER, H. (Editor in Chief), *Finite Element Handbook*, McGraw-Hill Book Company, New York, 1987.

NAFEMS, *Quality System Supplement to ISO 9001 Relating to Finite Element Analysis in The Design and Validation of Engineering Products*, Ref: R0013, National Agency for Finite Element Methods and Standards, East Kilbride, Glasgow, UK, 1990.

STEELE, J.E., *Applied Finite Element Modelling*, Marcel Dekker, Inc., New York, 1989.

Appendix A

Evaluation Forms for Assessment of Finite Element Models and Results

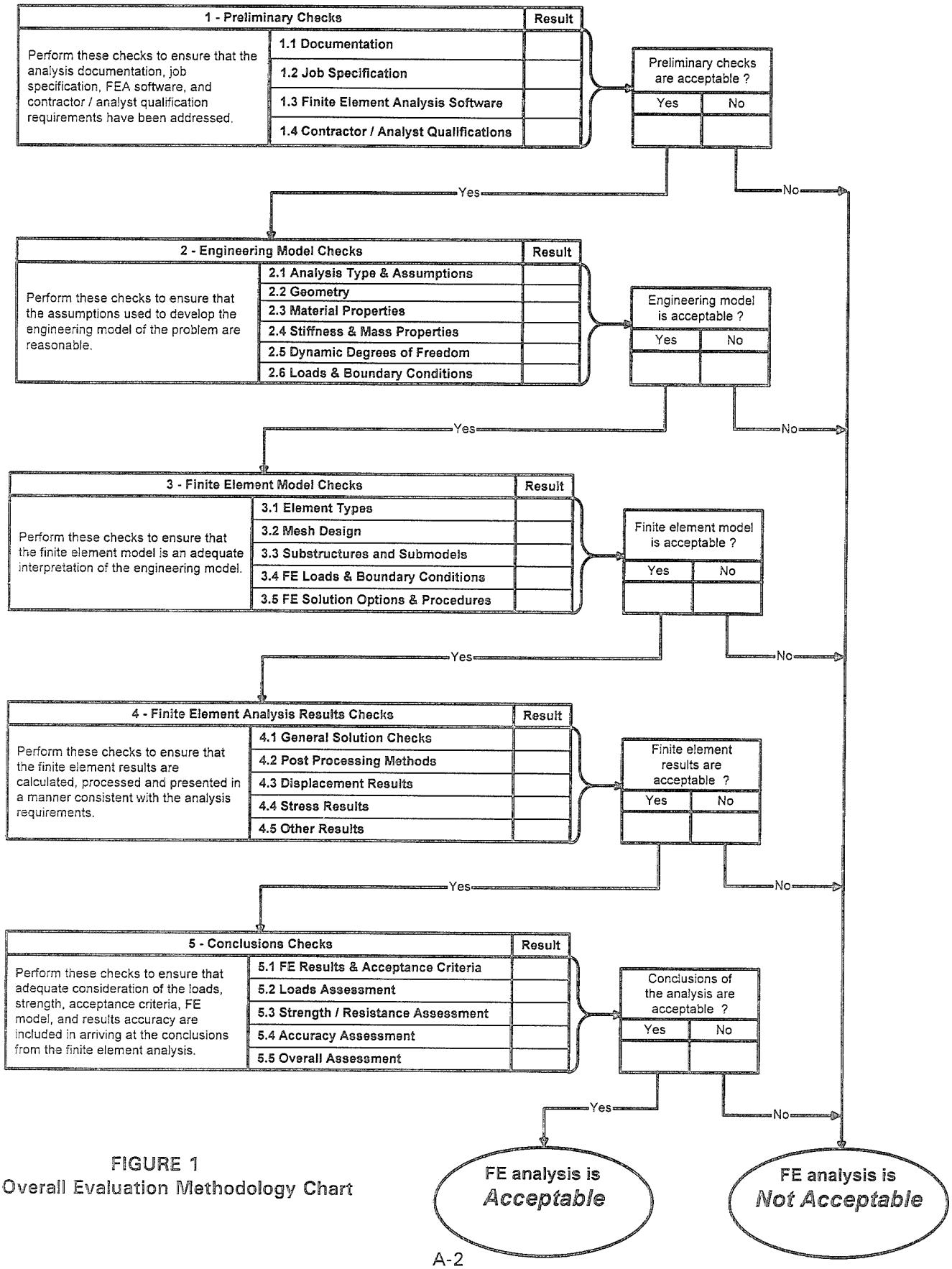

FIGURE 1
Overall Evaluation Methodology Chart

FINITE ELEMENT ANALYSIS ASSESSMENT		**PRELIMINARY CHECKS**
Project No.	*Project Title :*	
Contractor Name:		*Date :*
Analyst :	*Checker :*	

1.1 Documentation Requirements

Finite Element Analysis Assessment Check	Refer to Guideline Section	Result	Comments
1.1.1 Has the following information been provided in the FEA documentation?	3-1.1		
a) Objectives and scope of the analysis.			
b) Analysis requirements and acceptance criteria.			
c) FEA software used.			
d) Description of physical problem.			
e) Description of engineering model.			
f) Type of analysis.			
g) System of units.			
h) Coordinate axis systems.			
i) Description of FEA model.			
j) Plots of full FEA model and local details.			
k) Element types and degrees of freedom per node.			
l) Material properties.			
m) Element properties (stiffness & mass properties).			
n) FE loads and boundary conditions.			
o) Description and presentation of the FEA results.			
p) Assessment of accuracy of the FEA results.			
q) Conclusions of the analysis.			
r) List of references.			

Based on the above checks answer Question 1.1 and enter result in Figure 1.0.	*Result*
1.1 Is the level of documentation sufficient to perform an assessment of the FEA?	
Comments	

1.2 Job Specification Requirements

Finite Element Assessment Check	Refer To Guideline Section	Result	Comments
1.2.1 Is the job specification identified and referenced in the analysis documentation?	3-1.2		
1.2.2 Are the objectives and scope of the analysis clearly stated and are they consistent with those of the job specification?	3-1.2		
1.2.3 Are the analysis requirements clearly stated and are they consistent with those of the job specification?	3-1.2		
1.2.4 If certain requirements of the job specification have not been addressed (such as certain load cases), has adequate justification been given?	3-1.2		
1.2.5 Are the design / acceptance criteria clearly stated and are they consistent with those of the job specification?	3-1.2		
1.2.6 Is there reasonable justification for using FEA for this problem?	3-1.2		
1.2.7 Has advantage been taken of any previous experimental, analytical, or numerical works that are relevant to this problem?	3-1.2		

Based on the above checks answer Question 1.2 and enter result in Figure 1.0.	*Result*
1.2 Does the analysis address the job specification requirements?	
Comments	

1.3 Finite Element Analysis Software Requirements

Finite Element Analysis Assessment Check	Refer To Guideline Section	Result	Comments
1.3.1 Is the FEA software on the list of approved programs for ship structural analysis applications?	3-1.3		
If the answer to Check 1.3.1 is "Y", you may skip Checks 1.3.2 and 1.3.3.			
1.3.2 Are the capabilities and limitations of the FEA software used to perform the required analysis stated in the analysis documentation?	3-1.4		
1.3.3 Is evidence of this capability documented and available for review (eg. verification manual, results of ship structure FEA benchmark tests, previous approved FEA of similar problems)?	3-1.3		
1.3.4 Does the vendor of the FEA software have a quality system to ensure that appropriate standards are maintained in software development and maintenance.			

Based on the above checks answer Question 1.3 and enter result in Figure 1.0.	***Result***
1.3 Is the FEA software qualified to perform the required analysis?	
Comments	

NOTE: Part 4 of this report presents benchmark problems for the purpose of assessing the quality and suitability of FEA software for performing ship structural analysis. On its own, successful performance of the candidate FEA software in exercising the benchmark problems is not sufficient evidence of the quality and suitability of the software. The assessor should, in addition, be able to answer the other questions in the table above affirmatively.

1.4 Contractor / Personnel Qualification Requirements

Finite Element Assessment Check	Refer To Guideline Section	Result	Comments
1.4.1 Do the contractor personnel have adequate academic training and experience qualifications to perform finite element analysis?	3-1.5		
1.4.2 Do the contractor personnel have adequate engineering experience qualifications for performing ship structural design or analysis?	3-1.5		
1.4.3 Do the contractor and contractor personnel have adequate professional certification qualifications?	3-1.5		
1.4.4 Does the contractor have a working system of Quality Assurance (QA) procedures and checks that are satisfactory for the requirement?	3-1.5		
1.4.5 Do the contractor personnel have adequate experience with the FEA software used for the analysis?	3-1.5		

Based on the above checks answer Question 1.4 and enter result in Figure 1.0.	*Result*
1.4 Is the contractor adequately qualified for performing ship structure FEA?	
Comments	

FINITE ELEMENT ANALYSIS ASSESSMENT		**ENGINEERING MODEL CHECKS**
Project No.	*Project Title :*	
Contractor Name:		*Date :*
Analyst :	*Checker :*	

2.1 Analysis Type and Assumptions

Finite Element Analysis Assessment Check	Refer To Guideline Section	Result	Comments
2.1.1 Does the engineering model employ enough dimensions and freedoms to describe the structural behaviour (eg. 1-D, 2-D, or 3-D)?	3-2.1		
2.1.2 Does the engineering model address the appropriate scale of response for the problem (eg. global, intermediate, or local response)?	3-2.1		
2.1.3 Is the type of analysis appropriate for the type of response and loading of interest (eg. linear, static, dynamic, buckling analysis)?	3-2.1		
2.1.4 Does the engineering model address all the required results parameters (eg. stress, displacement, frequency, buckling load)?	3-2.1		
2.1.5 Are all assumptions affecting the choice of engineering model and analysis type justified (watch for non-standard assumptions)?	3-2.1		
2.1.6 Is the level of detail, accuracy or conservatism of the engineering model appropriate for the criticality of the analysis and type of problem?	3-2.1		
2.1.7 Does the analysis employ a consistent set of units?	3-2.1		
2.1.8 Does the analysis employ a consistent global coordinate axis system?	3-2.1		

Based on the above checks answer Question 2.1 and enter result in Figure 1.0.	*Result*
2.1 Are the assumptions of the type of analysis and engineering model acceptable?	
Comments	

2.2 Geometry Assumptions

Finite Element Analysis Assessment Check	Refer To Guideline Section	Result	Comments
2.2.1 Does the extent of the model geometry capture the main structural actions, load paths, and response parameters of interest?	3-2.2		
2.2.2 Are correct assumptions used to reduce the extent of model geometry (eg. symmetry, boundary conditions at changes in stiffness)?	3-2.2		
2.2.3 Will the unmodelled structure (ie. outside the boundaries of the engineering model) have an acceptably small influence on the results?	3-2.2		
2.2.4 Are the effects of geometric simplifications (such as omitting local details, cut-outs, etc.) on the accuracy of the analysis acceptable ?	3-2.2		
2.2.5 For local detail models, have the aims of St. Venant's principle been satisfied?	3-2.2		
2.2.6 Do the dimensions defining the engineering model geometry adequately correspond to the dimensions of the structure?	3-2.2		
2.2.7 For buckling analysis, does the geometry adequately account for discontinuities and imperfections affecting buckling capacity?	3-2.2		

Based on the above checks answer Question 2.2 and enter result in Figure 1.0.	*Result*
2.2 Are the geometry assumptions in the engineering model acceptable?	
Comments	

2.3 Material Properties

Finite Element Analysis Assessment Check	Refer To Guideline Section	Result	Comments
2.3.1 Are all materials of structural importance to the problem accounted for in the engineering model?	3-2.3		
2.3.2 Are the assumed behaviours valid for each material (eg. linear elastic, isotropic, anisotropic, orthotropic)?	3-2.3		
2.3.3 Are the required material parameters defined for the type of analysis (eg. E, v, etc.)?	3-2.3		
2.3.4 Are orthotropic and / or layered properties defined correctly for non-isotropic materials such as wood and composites?	3-2.3		
2.3.5 Are orthotropic properties defined correctly where material orthotropy is used to simulate structural orthotropy (eg. stiffened panels)?	3-2.3		
2.3.6 If strain rate effects are expected to be significant for this problem, are they accounted for in the material properties data?	3-2.3		
2.3.7 Are the values of the materials properties data traceable to an acceptable source or reference (eg. handbook, mill certificate, coupon tests)?	3-2.3		
2.3.8 Are the units for the materials properties data consistent with the system of units adopted for other parts of the analysis?	3-2.3		

Based on the above checks answer Question 2.3 and enter result in Figure 1.0.	*Result*
2.3 Are the assumptions and data defining the material properties acceptable?	
Comments	

2.4 Stiffness and Mass Properties

Finite Element Analysis Assessment Check	Refer To Guideline Section	Result	Comments
2.4.1 Are all components that have significant effect on the stiffness of the structure accounted for in the engineering model ?	3-2.4		
2.4.2 Are the assumed stiffness behaviours valid for each structural component (eg. linear, membrane, bending, shear, torsion, etc.)?	3-2.4		
2.4.3 Are the required stiffness parameters defined for each component, eg. : Truss members - A Beams, bars - A, I_{yy}, I_{zz}, other Plates, shells - t (uniform or varying) Springs - K (axial or rotational)	3-2.4		
2.4.4 Do the section properties of stiffeners (where modelled with beams) include correct allowances for the effective plate widths?	3-2.4		
2.4.5 If torsion flexibility is expected to be important, are torsion flexibility parameters correctly defined for beam sections?	3-2.4		
2.4.6 If shear flexibility is expected to be important, are shear flexibility parameters correctly defined for beam and/or plate elements?	3-2.4		
If mass or inertial effects are not applicable to this problem, proceed to Check 2.4.13 on the following page.			
2.4.8 Are all components that have significant effect on the mass of the structure accounted for in the engineering model?	3-2.4		
2.4.9 Have material properties data for density been defined (see also Check 2.3.3)?	3-2.4		
2.4.10 Has the added mass of entrained water been adequately accounted for with structure partially or totally submerged under water?	3-2.4		
2.4.11 Are lumped mass representations of structural mass and / or equipment correctly consolidated and located?	3-2.4		
2.4.12 If rotational inertia is expected to be important, are mass moments of inertia properties correctly defined for masses?	3-2.4		

Finite Element Analysis Assessment Check	Refer To Guideline Section	Result	Comments
2.4.13 Are the values of the stiffness and mass properties data supported by acceptable calculations and / or references?	3-2.4		
2.4.14 If relevant, has fluid-structure interaction been accounted for? Has the added mass been included in the model?	3-2.4		
2.4.15 Are the units for the stiffness and mass properties data consistent with the system of units for other parts of the analysis?	3-2.4		

Based on the above checks answer Question 2.4 and enter result in Figure 1.0.	*Result*
2.4 Are the assumptions and data defining stiffness and mass properties acceptable?	
Comments	

2.5 Dynamic Degrees of Freedom

If the analysis is not a reduced dynamic analysis, you may proceed directly to Part 2.6.

Finite Element Analysis Assessment Check	Refer To Guideline Section	Result	Comments
2.5.1 Are dynamic dof defined in enough directions to model the anticipated dynamic response behaviour of the structure?	3-2.5		
2.5.2 Are the number of dynamic dof at least three times the highest mode required (eg. if 30 modes required, need at least 90 dof)?	3-2.5		
2.5.3 Are the dynamic dof located where the highest modal displacements are anticipated?	3-2.5		
2.5.4 Are the dynamic dof located where the highest mass-to-stiffness ratios occur for the structure?	3-2.5		
2.5.5 Are dynamic dof located at points where forces or seismic inputs are to be applied for dynamic response analyses?	3-2.5		
2.5.6 Are the number of dynamic dof such that at least 90% of the structural mass is accounted for in the reduced model in each direction?	3-2.5		

Based on the above checks answer Question 2.4 and enter result in Figure 1.0.	*Result*
2.5 Are the assumptions and data defining dynamic degrees of freedom acceptable?	
Comments	

2.6 Loads and Boundary Conditions

Finite Element Analysis Assessment Check	Refer To Guideline Section	Result	Comments
2.6.1 Are all required loadings / load cases accounted for, and has sufficient justification been provided for omitting certain loadings?	3-2.6		
2.6.2 Are the loading assumptions stated clearly and are they justified?	3-2.6		
2.6.3 Has an assessment been made of the accuracy and / or conservatism of the loads?	3-2.6		
2.6.4 Are the procedures for combining loads / load cases (eg. superposition) adequately described and are they justified?	3-2.6		
2.6.5 Have the boundary conditions assumptions been stated clearly and are they justified?	3-2.6		
2.6.6 Do the boundary conditions adequately reflect the anticipated structural behaviour?	3-2.6		
2.6.7 Has an assessment been made of the accuracy of the boundary conditions, and if they provide a lower or upper bound solution?	3-2.6		

Based on the above checks answer Question 2.6 and enter result in Figure 1.0.	*Result*
2.6 Are the assumptions and data defining loads and boundary conditions reasonable?	
Comments	

FINITE ELEMENT ANALYSIS ASSESSMENT		FINITE ELEMENT MODEL CHECKS
Project No.	*Project Title :*	
Contractor Name:		*Date :*
Analyst :	*Checker :*	

3.1 Element Types

	Finite Element Analysis Assessment Check	Refer To Guideline Section	Result	Comments
3.1.1	Are all of the different types of elements used in the FEA model identified and referenced in the analysis documentation?	3-3.1		
3.1.2	Are the element types available in the FEA software used appropriate to ship structural analysis?	3-3.1		
3.1.3	Do the element types support the kind of analysis, geometry, materials, and loads that are of importance for this problem?	3-3.1		
3.1.4	If required, do the selected beam element types include capabilities to model transverse shear and / or torsional flexibility behaviour?	3-3.1		
3.1.5	If required, do the selected beam element types include capabilities to model tapered, off-set or unsymmetric section properties?	3-3.1		
3.1.6	If required, do the selected beam element types include capabilities for nodal dof end releases (eg. to model partial pinned joints)?	3-3.1		
3.1.7	If required, do the selected plate element types include capabilities to model out-of-plane loads and bending behaviour?	3-3.1		
3.1.8	If required, do the selected plate element types include capabilities to model transverse shear behaviour (ie. thick plate behaviour)?	3-3.1		
3.1.9	If the model is 2-D, are the selected element types (or options) correct for plane stress or plane strain (whichever case applies)?	3-3.1		
3.1.10	If required, can the selected element types model curved surfaces or boundaries to an acceptable level of accuracy?	3-3.1		

Based on the above checks answer Question 3.1 and enter result in Figure 1.0.	*Result*
3.1 Are the types of elements used in the FEA model acceptable?	
Comments	

3.2 Mesh Design

Finite Element Analysis Assessment Check		Refer To Guideline Section	Result	Comments
3.2.1	Does the mesh design adequately reflect the geometry of the problem (eg. overall geometry, stiffener locations, details, etc.)?	3-3.2		
3.2.2	Does the mesh design adequately reflect the anticipated structural response (eg. stress gradients, deflections, mode shapes)?	3-3.2		
3.2.3	Are nodes and elements correctly located for applying loads, support and boundary constraints, and connections to other parts?	3-3.2		
3.2.4	Does the analysis documentation state or show that there are no "illegal" elements in the model (ie. no element errors or warnings)?	3-3.2		
3.2.5	Are the element shapes in the areas of interest acceptable for the types element used and degree of accuracy required?	3-3.2		
3.2.6	Are mesh transitions from coarse regions to areas of refinement acceptably gradual?	3-3.2		
3.2.7	Are element aspect ratios acceptable, particularly near and at the areas of interest?	3-3.2		
3.2.8	Are element taper or skew angles acceptable, particularly near and at the areas of interest?	3-3.2		
3.2.9	If flat shell elements are used to model curved surfaces, are the curve angles $< 10°$ for stresses, or $< 15°$ for displacement results?	3-3.2		
3.2.10	If flat shell elements are used for double or tapered curve surfaces, is warping avoided (eg. small curve angles, use of triangles)?	3-3.2		
3.2.11	Is the mesh free of unintentional gaps or cracks, overlapping or missing elements?	3-3.2		
3.2.12	Is proper node continuity maintained between adjacent elements (also continuity between beam and plate elements in stiffened panels)?	3-3.2		
3.2.13	Are the orientations of the beam element axes correct for the defined section properties?	3-3.2		

Finite Element Analysis Assessment Check	Refer To Guideline Section	Result	Comments
3.2.14 Are differences in rotational dof / moment continuity for different element types accounted for (eg. beam joining solid)?	3-3.2		
3.2.15 Are the outward normals for plate / shell elements of a surface in the same direction?	3-3.2		

Based on the above checks answer Question 3.2 and enter result in Figure 1.0.	*Result*
3.2 Is the design of the finite element mesh acceptable?	
Comments	

3.3 Substructures and Submodelling

Finite Element Analysis Assessment Check	Refer To Guideline Section	Result	Comments
3.3.1 Is the overall substructure or submodelling scheme or procedure adequately described in the analysis documentation?	3-3.3		
3.3.2 Are all individual substructure models, global models and refined submodels identified and described in the analysis documentation?	3-3.3		
3.3.3 Are the master nodes located correctly and are the freedoms compatible for linking the substructures?	3-3.3		
3.3.4 Are the master nodes located correctly for application of loads and boundary conditions upon assembly of the overall model?	3-3.3		
3.3.5 Are loads and boundary conditions applied at the substructure level consistent with those of the overall model?	3-3.3		
3.3.6 Does the boundary of the refined submodel match the boundary of coarse elements / nodes in the global model at the region of interest?	3-3.3		
3.3.7 Is the boundary for the submodel at a region of relatively low stress gradient or sufficiently far away from the area of primary interest?	3-3.3		
3.3.8 Does the refined submodel correctly employ forces and / or displacements from the coarse model as boundary conditions?	3-3.3		
3.3.9 Does the submodel include all other loads applied to the global model (eg. surface pressure, acceleration loads, etc.)?	3-3.3		
3.3.10 Have stiffness differences between the coarse global mesh and refined submodel mesh been adequately accounted for?	3-3.3		

Based on the above checks answer Question 3.3 and enter result in Figure 1.0.	*Result*
3.3 Are the substructuring or submodelling procedures acceptable?	
Comments	

3.4 FE Model Loads and Boundary Conditions

Finite Element Analysis Assessment Check	Refer To Guideline Section	Result	Comments
3.4.1 Are point load forces applied at the correct node locations on the structure and are they the correct units, magnitude, and direction?	3-3.4		
3.4.2 Are distributed loads applied at the correct locations on the structure and are they the correct units, magnitude and direction?	3-3.4		
3.4.3 Are surface pressure loads applied at the correct locations on the structure and are they the correct units, magnitude and direction?	3-3.4		
3.4.4 Are translational accelerations in the correct units, and do they have the correct magnitude and direction?	3-3.4		
3.4.5 Are rotational accelerations the correct units, magnitude and direction and about the correct centre of rotation?	3-3.4		
3.4.6 Are prescribed displacements applied at the correct locations on the structure and are they the correct units, magnitude and direction.	3-3.4		
3.4.7 Are the displacement boundary conditions applied at the correct node locations?	3-3.4		

Based on the above checks answer Question 3.4 and enter result in Figure 1.0.	*Result*
3.4 Are the FE loads and boundary conditions applied correctly?	
Comments	

3.5 Solution Options and Procedures

Finite Element Analysis Assessment Check	Refer To Guideline Section	Result	Comments
3.5.1 Have any special solution options and procedures been used and, if so, have they been documented?	3-3.5		
3.5.2 If non-standard options been invoked have they been documented and the reasons for their use been explained?	3-3.5		
3.5.3 If the problem is a dynamic analysis is the method for eigenvalue and mode extraction appropriate?	3-3.5		

Based on the above checks answer Question 3.5 and enter result in Figure 1.0.	*Result*
3.5 Are the solution options and procedures followed for the FEA acceptable?	
Comments	

FINITE ELEMENT ANALYSIS ASSESSMENT		**FINITE ELEMENT RESULTS CHECKS**
Project No.	*Project Title :*	
Contractor Name:		*Date :*
Analyst :	*Checker :*	

4.1 General Solution Checks

Finite Element Analysis Assessment Check	Refer To Guideline Section	Result	Comments
4.1.1 Are all error and warning messages issued by the software reviewed and understood?	3-4.1		
4.1.2 Is the magnitude of mass of the finite element model approximately as expected?	3-4.1		
4.1.3 Is the location of centre of gravity of the model, as calculated by the program, reasonable?	3-4.1		
4.1.4 Are the applied forces in equilibrium with the applied reactions?	3-4.1		

Based on the above checks answer Question 4.1 and enter result in Figure 1.0.	*Result*
4.1 Are the general solution parameters acceptable?	
Comments	

4.2 Post Processing Methods

Finite Element Analysis Assessment Check	Refer To Guideline Section	Result	Comments
4.2.1 Are the methods for reducing analysis results described (eg. calculation of safety factors and other parameters calculated by manipulating raw output)?	3-4.2		
4.2.2 Are the methods for "correcting" FE results described (eg. correction factors, smoothing factors)?	3-4.2		

Based on the above checks answer Question 4.2 and enter result in Figure 1.0.	*Result*
4.2 Is the methodology used for post processing the results satisfactory?	
Comments	

4.3 Displacement Results

Finite Element Analysis Assessment Check	Refer To Guideline Section	Result	Comments
4.3.1 Are the displacement results described and discussed?	3-4.3		
4.3.2 Are plots of the deformed structure (or mode shape) presented?	3-4.3		
4.3.3 Are the directions of displacements consistent with the geometry, loading and boundary conditions?	3-4.3		
4.3.4 Do the magnitudes of displacements make sense?	3-4.3		
4.3.5 Is the deformed shape (or mode shape) smooth and continuous in area of interest?	3-4.3		
4.3.6 Are unintentional slits or cuts (indicating elements not connected where they should be) absent?	3-4.3		

Based on the above checks answer Question 4.3 and enter result in Figure 1.0.	*Result*
4.3 Are displacement results consistent with expectations?	
Comments	

4.4 Stress Results

Finite Element Analysis Assessment Check	Refer To Guideline Section	Result	Comments
4.4.1 Are the stress results described and discussed?	3-4.4		
4.4.2 Are stress contour plots presented? In the stress plots are the stress parameters or components defined (eg. σ_x, σ_y, τ_{xy}, etc.)?	3-4.4		
4.4.3 Is the method of smoothing stress results, or averaging stress results described (eg. element stresses vs nodal average stresses)?	3-4.4		
4.4.4 Are the units of stress parameters consistent?	3-4.4		
4.4.5 Are the magnitudes of stresses consistent with intuition?	3-4.4		
4.4.6 In cases where there are adjacent plate elements with different thicknesses does the method for averaging stresses account for the differences?	3-4.4		
4.4.7 Are the stress contours smooth and continuous, particularly in region of primary interest?	3-4.4		
4.4.8 Are the stress contours at boundaries consistent with the boundary conditions applied (eg. stress contours perpendicular to boundary if symmetry bc)?	3-4.4		
4.4.9 Are stresses local to the applied loads reasonable?	3-4.4		
4.4.10 Are there areas in which stresses are above yield (which would invalidate linear elastic analysis)?	3-4.4		

Based on the above checks answer Question 4.4 and enter result in Figure 1.0.	*Result*
4.4 Are stress results consistent with expectations?	
Comments	

4.5 Other Results

Finite Element Analysis Assessment Check	Refer To Guideline Section	Result	Comments
4.5.1 Are the frequencies expressed in correct units?	3-4.5		
4.5.2 Are the magnitudes of natural frequencies consistent with the type of structure and mode number?	3-4.5		
4.5.3 Are the mode shapes smooth?	3-4.5		

Based on the above checks answer Question 4.5 and enter result in Figure 1.0.	*Result*
4.5 Are dynamics results consistent with expectations?	
Comments	

FINITE ELEMENT ANALYSIS ASSESSMENT		**CONCLUSIONS CHECKS**
Project No.	*Project Title :*	
Contractor Name:		*Date :*
Analyst :	*Checker :*	

5.1 FEA Results and Acceptance Criteria

Finite Element Analysis Assessment Check	Refer To Guideline Section	Result	Comments
5.1.1 Are the results summarised in a manner that allows comparisons with acceptance criteria, or alternative solutions or data?	3-5.1		
5.1.2 Are satisfactory explanations provided where the results do not meet acceptance criteria, or where they differ significantly from other comparable solutions or data?	3-5.1		

Based on the above checks answer Question 5.1 and enter result in Figure 1.0.	*Result*
5.1 Are the results presented in sufficient detail to allow comparison with acceptance criteria?	
Comments	

5.2 Load Assessment

Finite Element Analysis Assessment Check	Refer To Guideline Section	Result	Comments
5.2.1 Has an assessment been made of the accuracy or degree of conservatism of the loads used in the FE model with respect to the following aspects :	3-5.2		
a) types of loads / load cases that were included and excluded			
b) basis or theory used to derive loads (eg. linear strip theory for sea motion loads, base acceleration vs DRS for shock, drag coefficients for wind loads, etc.)			
c) magnitudes of loads			
d) loading directions included / excluded			
e) load combinations			
f) load factors			
g) boundary conditions			

Based on the above checks answer Question 5.2 and enter result in Figure 1.0.	*Result*
5.2 Are the accuracy and conservatism, or otherwise, of the applied loading modelled understood?	
Comments	

5.3 Strength / Resistance Assessment

Finite Element Analysis Assessment Check	Refer To Guideline Section	Result	Comments
5.3.1 Has an assessment been made of the accuracy or degree of conservatism of the strength or resistance of the modelled structure with respect to the following aspects :	3-5.3		
a) failure theory, failure criteria, allowable stresses, safety factors, etc			
b) section properties			
c) material properties			
d) allowances for imperfection, misalignment, manufacturing tolerances			
e) allowances for corrosion			

Based on the above checks answer Question 5.3 and enter result in Figure 1.0.	*Result*
5.3 Has an adequate assessment been made of the capability of the structure?	
Comments	

5.4 Accuracy Assessment

Finite Element Analysis Assessment Check	Refer To Guideline Section	Result	Comments
5.4.1 Has an assessment been made of the scale of FE model and its level of detail and complexity?	3-5.4		
5.4.2 Have the types of behaviour modelled and not modelled (eg. membrane only instead of membrane plus bending) been assessed?	3-5.4		
5.4.3 Has the influence of mesh refinement on accuracy been considered?	3-5.4		
5.4.4 Has a comparison with other results (eg. other solutions, experiment, etc.) been made?	3-5.4		
5.4.5 Based on the above has an overall assessment of the accuracy of the relevant results been made?	3-5.4		

Based on the above checks answer Question 5.4 and enter result in Figure 1.0.	*Result*
5.4 Has an adequate assessment of the accuracy of the analysis been made?	
Comments	

5.5 Overall Assessment

Finite Element Analysis Assessment Check	Refer To Guideline Section	Result	Comments
5.5.1 Are conclusions from the FEA provided, and are they consistent with the material presented?	3-5.5		
5.5.2 If appropriate has a way ahead or potential solutions been presented?	3-5.5		
5.5.3 Based on consideration of all previous checks is the overall assessment that the FEA is acceptable?	3-5.5		

Based on the above checks answer Question 5.5 and enter result in Figure 1.0.	*Result*
5.5 Is the finite element analysis assessed generally satisfactory?	
Comments	

Appendix B

Example Application of Assessment Methodology

B1.0 INTRODUCTION

The purpose of this Appendix is to illustrate the application of the FEA assessment methodology and the guidelines presented in Parts 2 and 3 of this document.

An example finite element analysis (FEA) of a web frame from an Arctic-going tanker design subject to ice loads is used for this purpose. The approach used to illustrate the assessment methodology and guidelines includes :

- a sample report of the Arctic tanker web frame FEA, annotated with references to relevent sections of the FEA assessment methodology and guidelines; and
- completed checklists as required by the assessment methodology.

The annotated report and the completed checklists are presented in Annexes B-1 and B-4 respectively.

B2.0 EXAMPLE FINITE ELEMENT ANALYSIS

The example FEA is adapted from an analysis for an actual design[1] of an icebreaking tanker. The tanker is double hulled. Transverse strength is provided by a series of closely spaced web frames, and the longitudinal load transfer is achieved through several longitudinal stringers. The design requirements are based on current Canadian rules.

The primary interest for this analysis is the behaviour of a typical web frame in response to ice loads. Other loads are ignored as negligible compared with the ice loads. The analysis was performed to ensure that the side structure that directly resists the ice loads responds in the manner expected by the designers, and that the structure is as optimized as possible.

This example illustrates several aspects of finite element modelling common in ship structures including:

- behaviour of stiffened plate structures
- openings in structures
- discontinuities often found in ship structures
- integrated nature of typical ship structures
- use of most types of elements commonly used in the FEA of ship structures.

For reasons explained in Annex B-1 it was necessary to make modifications to the original analysis, particularly in regard to the level of ice load, to make it suitable for the purposes of the present work.

---

[1] The design was undertaken by Canarctic Shipping Co. Ltd., Ottawa, Ontario, Canada under contract to the Transportation Development Centre, Montreal, Quebec, Canada

B3.0 ANNOTATED REPORT

Annex B-1 presents a sample report of the Arctic tanker web frame FEA that has been prepared by a contractor ("BB Engineering") and has been subjected to the assessment methodology. For illustrative purposes the report has been annotated with short descriptions identifying the relevant part of the assessment methodology presented in Parts 2 and 3 of this document. Except for the annotations the report is meant to be typical of the documentation that an evaluator of FEA might recieve.

B4.0 CHECKLISTS

A sample of completed FEA evaluation checklists for the report in Annex B-1 are presented in Annex B-4.

Acknowledgement

The finite element analysis described in the following pages is adapted from an analysis performed by MIL Systems Engineering, Ottawa, Ontario for Canarctic Shipping Ltd., Ottawa, Ontario under a contract awarded by the Transportation Development Centre, Montreal, Quebec.

Warning

This example is presented solely for the purpose of illustrating the assessment methodology described in Part 2. As such it is not necessarily complete in all details, particularly in regard to parameters such as number of loading types, design criteria, and number of structural responses considered. Furthermore this example should not be construed as representative of the requirements for a finite element analysis of other marine structures.

Annex B-1

Finite Element Analysis of Arctic Tanker Web Frame

BB Engineering Ltd.
13-1300 Finite Drive
Ottawa, Ontario
xxx xxx

May 1995

ANNEX B-1 TABLE OF CONTENTS

Page No.

1.0 INTRODUCTION B-6

2.0 PRELIMINARY INFORMATION B-6
- 2.1 Job Specification B-6
- 2.2 Rationale for using Finite Element Method B-7
- 2.3 FEA Software B-7
- 2.4 Contractor and Analyst Qualifications B-7

3.0 ENGINEERING MODEL B-7
- 3.1 Analysis Type and Assumptions B-7
- 3.2 Global Geometry of 50000 DWT Tanker B-8
- 3.3 Frame Selected B-8
- 3.4 Extent of Model B-9
- 3.5 Material Properties B-9
- 3.6 Interaction with Adjacent Structure B-10
- 3.7 Loads B-11
- 3.8 Boundary Conditions B-12

4.0 FINITE ELEMENT MODEL B-12
- 4.1 General Information B-12
- 4.2 Element Selection B-12
- 4.3 Mesh Design B-13
- 4.4 Finite Element Attributes and Spring Constants B-14
- 4.5 FE Model Loads and Boundary Conditions B-16
- 4.6 FE Model Checks B-17
- 4.7 FE Solution Option and Procedures B-18

5.0 ANALYSIS RESULTS B-18
- 5.1 General Solution Checks B-18
- 5.2 Post Processing Methods B-18
- 5.3 Structural Response B-19

6.0 CONCLUSIONS B-20

7.0 REFERENCES B-20

Annex B-2 Company and Personnel Qualifications B-35
- B-2.1 Contractor Qualifications B-35
- B-2.2 Personnel Qualifications B-35

Annex B-3 FEA Results Verification B-36

Annex B-4 Sample Completed Assessment Methodology Forms B-37

FINITE ELEMENT ANALYSIS OF 50000 DWT TANKER SINGLE MIDBODY WEB FRAME

1.0 INTRODUCTION

AA Shipping Company Limited has developed a design for a 50000 DWT Arctic tanker. The focus of the work has been to design cost optimized midbody and bow structures.

The BB Engineering Co Ltd. (BBE) has been tasked to undertake a finite element analysis (FEA) of a typical midbody web (diaphragm) frame. The purpose of the FEA reported in this report is to assess the response of the midship structure to ice loads.

Section 2 of this report provides a summary of the requirements for the analysis, and data on the software and the resources applied to the problem. The engineering model is described in Section 3. This section includes a discussion of the subject structure and the assumptions made in developing the engineering model. Section 4 describes the finite element model, and Section 5 presents the results of the analysis.

2.0 PRELIMINARY INFORMATION

2.1 Job Specification

The job specification calls for a static, linear elastic, FEA of a web frame from the midbody section of the 50000 DWT tanker at a design ice load of 4435 kN.

Job Specification Para. 1.2 in the Assessment Methodology

The finite element model is based on the drawings provided in Arctic Tanker Structural Evaluation - Midship Sections, Bow Sections and Repair Drawings (Ref. 2).

The acceptance criteria for the analysis are as follows:

Acceptance Criteria Para 1.2.5

1. maximum stress not to exceed the material yield stress except as noted in item 2.
2. very localized stresses in excess of yield stress are considered acceptable

2.2 Rationale for using Finite Element Method

The structure under investigation is too complex to be analyzed by hand calculation particularly in regions of high stress concentrations.

Justification for using FEA
Para. 1.2.6

2.3 FEA Software

ANSYS finite element software (Version 5.1), developed and supported by ANSYS Inc. of Houston, PA, was used for the finite element work performed and presented here. ANSYS is a well established FEA package has a proven track record in analyzing structures of the type under consideration. BBE currently has a maintenance and technical support contract with ANSYS, Inc. The software updates and error reports received from ANSYS are reviewed by all BBE staff involved in FEA, and filed along with other ANSYS documents. ANSYS's shell and beam elements have been validated by BBE for use in ship structural analysis. ANSYS has been evaluated against benchmarks designed to test the capability of the software to perform ship structural FEA.

FEA Software
Para. 1.3.1

2.4 Contractor and Analyst Qualifications

Information on qualifications of the contractor, the analysts, and the supervisor, to perform the required FEA is provided in Annex B-2 of this document.

Contractor / Personnel Qualification
Para. 1.4

3.0 ENGINEERING MODEL

3.1 Analysis Type and Assumptions

Since the stresses are limited to the yield stress the material behaviour is assumed to be linear. Similarly because large deflections are not expected geometric behaviour is assumed to be linear as well.

Analysis Type & Assumptions
Para. 2.1

The load is assumed to be static and interest is centred on the strength of the frame. Hence, the dynamic behaviour of the frame is not within the scope of this analysis. Instability behaviour is also not considered in this analysis. However, it should be considered as part of the design process.

The overall strength of the frame is the primary focus of this analysis, and therefore the analysis is not optimized to examine stress concentrations at structural discontinuities such as those that will exist around openings for example. Again these should be addressed as part of the normal design process.

3.2 Global Geometry of 50000 DWT Tanker

Geometry Assumptions Para. 2.2

The 50000 DWT tanker has a waterline length of 242 metres, a breadth of 34.6 metres and a depth of 18.1 metres. The vessel has seven cargo tanks. In the cargo tank region of the vessel the distance between transverse bulkheads is 19.2 metres. Each cargo tank has approximate dimensions of 18 m x 30.6 m x 14.6m.

The vessel is double hulled. The distance between the inner and outer hulls is 2000 mm. The bottom structure wraps around the turn of the bilge and connects to the side shell structure at a point 4.0 metres above baseline. The side shell structure connects with the deck structure at a point 15.0 metres above baseline. Therefore, the side shell structure vertically spans a distance of 11.0 metres. The structure is transversely framed by web frames (diaphragms) spaced at 1000 mm intervals. Longitudinal framing is provided by several stringers spanning between bulkheads.

The midship section is shown in Figure[1] 3.1

3.3 Frame Selected

Extent of Model Para. 2.2.1

The ice load for the 50000 DWT tanker is approximately 22 metres in length and therefore, if centrally positioned, spans across a pair of bulkheads. The ice load applied to side structure is resisted by the transverse frames (each acting essentially as a ring), the deck structure, the bottom structure and by the transverse bulkheads.

Any transverse loads applied to the side structure are distributed vertically to the bottom and deck structures by transverse frames, and longitudinally to bulkheads through stringers.

The most severe loading case for a web frame is from ice load

1 *Figures are presented at the end of this document*

applied to the frame midway between bulkheads and centrally disposed with respect to the frame. The characteristics of the load are discussed in Section 3.7.

3.4 Extent of Model

Extent of Model Para. 2.2.1

An alternative method to account for the influence of the surrounding structure would be to model adjacent web frames and stringers approximately.

The structure of the vessel, between transverse bulkheads, is a series of ring frames comprising inner and outer hull plating with a stiffened plate diaphragm connecting them. These frames are connected by all longitudinally oriented structure (framing members and plating).

It is sufficient to model a single transverse ring frame if the correct boundary conditions are applied as discussed in Section 3.6. Due to the symmetry (structure and load) that exists along the vessel centreline it is also sufficient to model one half of the ring frame.

This ring frame extends from the bottom of the ship at centreline around to the vessel centreline at the deck. The width of the model needs to be the frame spacing (1000 mm) and will include the inner and outer shell plating and the stiffened plate diaphragm.

Figure 3.1 illustrates the midbody frame that was analyzed. Figure 3.2 shows the outer dimensions for the frame.

3.5 Material Properties

Material Properties Para. 2.3

Figure 3.2 indicates that the vessel material in the outer shell plating is Grade EH50 and that the inner shell and framing components are Grades DH36 and EH36. Table 3.1 lists the relevant material properties as taken from Reference 3 for these steel grades.

The Young's Modulus was taken as 208,700 MPa for all steel types. Parameters such as initial imperfections and residual strains were not included in the analysis, and no allowance is made for corrosion. These assumptions are consistent with the design criteria.

TABLE 3.1: Steel Mechanical Properties

Property	Steel Grade	
	EH50	DH36, EH36
Yield Stress (min.) (MPa)	500	355
Tensile Stress (MPa)	610 - 770	490 - 620
Elongation %	16	21
Young's Modulus (MPa)	208700	208700
Poisson's Ratio	0.3	0.3

3.6 Interaction with Adjacent Structure

Influence of unmodelled structure Para. 2.2.3

The midbody web frame is part of an integrated structural system comprising the inner and outer shells, the transverse frames and longitudinal girders. However, for the reasons discussed above, it is reasonable to isolate a single web frame for analysis provided that the interaction with adjacent structure is accounted for.

The primary interaction with adjacent structure (for the load pattern of interest to this analysis) is through load transfer via longitudinal structure. A reasonable approximation for this configuration is to account for the support provided by the longitudinal structure by using springs representing the stiffness of this structure.

With reference to Figure 3.1, springs are required at the following locations:

1. Centreline of Main Deck to account for the deck centreline longitudinal girder (vertically);
2. On Main Deck to account for the inboard side girder (vertically);
3. On Main Deck to account for the outboard side girder (vertical and horizontal components);
4. On side shell to account for the upper stringer (horizontal);

5. On side shell to account for the lower stringer at the top of the turn of the bilge (horizontal);
6. Bottom structure to account for the girders (3 locations - vertically);
7. Centreline of bottom structure to account for the centreline girder (vertically); and
8. Bottom structure to account for the bottom shell longitudinals (vertically).

Spring constants for the above items have been calculated as the inverse of the deflection at the midspan of the longitudinal member being evaluated (list above) due to a unit point load placed at each of the points of intersection with a midbody web frame along its length. The ends of the longitudinal member(s) have been conservatively assumed as pinned. If a fixed end condition had been assumed, the stiffness of the longitudinal structure would have been overestimated resulting in a greater load transfer from the midbody web frame than would be the case in reality.

Spring constants calculated and used in the FE model are listed in Section B4.4 Beam Section Properties.

3.7 Loads

Loads
Para. 2.6
Para. 3.4

Influence of Extent of Model
Para. 2.2.1

The ice load[2] is a function of vessel displacement, power of the vessel, the region of the ship, and the Arctic Class. Taking account of the various factors associated with ship parameters the total load applied to the web frame is 4435 kN. This is applied as a uniform pressure of 1 metre width (which equals the web frame spacing) and 2.85 metre height. This translates to a pressure of 1.556 MPa. As required by the standard the pressure patch is positioned such that 10% of its height is above the waterline.

The load applied is illustrated in Figure 3.3.

---

[2] *The ice loads are adapted from Ref. 1. The structural design philosophy of this standard is based on plastic design. Hence design loads calculated from this standard will, for a well designed structure, result in extensive yielding. For the purposes of this example FEA, which assumes linear elastic behaviour, the load applied has been arbitrarily halved to ensure the structure remains elastic.*

3.8 Boundary Conditions

Boundary Conditions
Para. 2.6
Para. 3.4

Symmetry is assumed about a vertical plane through the longitudinal axis of the ship. Therefore, symmetry boundary conditions are applied to all nodes along the outer (longitudinal) edges of the plates. This provides translational restraint along the longitudinal axis of the vessel, and rotational restraint about the other two axes.

Symmetrical boundary conditions are applied to the bottom structure and the deck structure intersecting the vertical plane through the longitudinal axis of the ship. In addition, the bottom shell plating along the centre line is fixed in the vertical translation to avoid rigid body motion

4.0 FINITE ELEMENT MODEL

4.1 General Information

Units
Para. 2.1.7

SI units were used throughout the finite element model. Therefore, the units of length, area, moment of inertia, Young's Modulus, and pressure were mm, mm^2, mm^4, MPa, and MPa respectively.

Global axes system
Para. 2.1.8

The global coordinate system for the problem is as follows:

Global X axis :	athwartship
Global Y axis :	vertical
Global Z axis :	parallel to ship CL

4.2 Element Selection

Element Types
Para. 3.1

The elastic shell element (SHELL63) of ANSYS was selected and used for modelling the web frame, and stiffeners from the bottom stringer of the side shell structure at the top of the turn of the bilge to the start of the sloped section on the outboard edge of the main deck. The stiffeners in other areas were modelled using 3-D elastic beam elements (BEAM44) of ANSYS. The stiffness of longitudinal girders were modelled using linear spring elements (COMBIN14).

The SHELL63 element is well suited for modelling linear behaviour of flat or warped, thin to moderately thick, shell structures. The

element has six degrees of freedom at each node: translations in the nodal x, y, and z directions and rotations about the element x, y, and z axes. The deformation shape is linear in the two in-plane directions. The out-of-plane motion is predicted using a mixed interpolation of tensorial components. The element is defined by four corner nodes, four thicknesses, and the orthotropic material properties (if required). A triangular shaped element may be formed by defining the same node numbers for the third and fourth nodes. Pressure load may be applied as surface loads on the element.

The stiffeners in the deck and bottom structure of the mid-body section have been modelled using 3-D elastic offset beam elements (BEAM44). BEAM44 is an uniaxial element with tension, compression, torsion, and bending capabilities. This element also has six degrees of freedom per node. The stiffeners in the side structure diaphragms were modelled using shell elements (SHELL63).

To simulate the overall stiffness of the rest of the structure, as discussed in Section 2.4, the connection points of the frame to other structure were modelled with linear springs (COMBIN14) elements. COMBIN14 elements are uniaxial tension-compression elements with up to three degrees of freedom at each node: translations in the nodal x, y, and z directions. Two sets of elements, one for springs in the horizontal direction and the other for springs in the vertical direction, were defined.

4.3 Mesh Design

Mesh Design Para. 3.2

The response of the side shell structure is of primary interest particularly in the vicinity of the loading. Therefore, the frame structure has been modelled with a fine mesh of shell elements in the following areas:

1. side shell structure between the turn of the bilge and the side shell upper stringer; and
2. outer edge of the deck structure between the side shell upper stringer and the deck angled outboard girder.

The remainder of the frame has been modelled using a coarse mesh of shell and beam elements. This ensures that the stiffness of this part of the structure is reasonably modelled in an

economical manner.

The mesh, consisting of beam and shell elements, used for the frame analysis is shown in Figure 4.1. The mesh design is consistent with the results expected from the finite element model, that is, a fine mesh is provided in the regions where a high stress gradient is expected with a coarse mesh provided elsewhere. The mesh is most dense around openings which are sources of stress concentrations. Since the primary interest is in establishing overall adequacy of the structure, the mesh density adopted is designed to yield stresses that are accurate for this purpose. Based on preliminary analyses the mesh around these openings should allow the prediction of peak stresses with an accuracy of roughly ± 5%.

The finite element model contains 3758 elements, 3578 nodes, and 18131 total active degrees of freedom.

4.4 Finite Element Attributes and Spring Constants

Stiffness and Mass Properties Para. 2.4

The attributes of the elements used in the model are listed in Table 4.1. The spring constants calculated based on the stiffness properties of the adjacent structure are listed in Table 4.2.

To avoid ill conditioning in the stiffness matrix ANSYS prints a warning if the ratio of largest to smallest stiffness value is greater than 1.0e08. The largest stiffness in the stiffness matrix being 4.179e+11, the smallest stiffness allowed is 4179 N/mm. Therefore, springs with stiffness less than 4179 N/mm were not used. Because of their relatively low stiffness values, these springs will have a negligible effect on the overall behaviour of the web frame.

TABLE 4.1: Finite Element Attributes

Item No.	Description	Element Type & No.	Mat. Type & No.	Real Cons. No	Thickness or Area mm/mm^2	Izz x10^6 mm^4	Iyy x10^3 mm^4	TKZT1 mm	TKYT1 mm
1	Diaphragms / Web Plating	Shell43	EH36	101	16				
2	Floors - Web Plating	"	"	102	26				
3	Deck Transverses - Web 1500x12	"	"	103	12				
4	Deck Plating	Shell43	EH36	104	14				
5	Outer Shell Plating	"	EH50	105	36				
6	Bottom Shell Plating	"	AH36	106	29				
7	Deck Transverses - Flange	Shell43	EH36	107	19				
8	Inner Deck Plating	"	"	108	14				
9	Inner Shell Plating	"	"	109	16.5				
10	Inner Shell Plating - Bilge	"	"	110	17				
11	Tank Top Plating	"	"	111	13				
12	Transverse Stiffeners - Diaphragms	Shell43	EH36	112	16				
13	Stringers	"	"	113	16				
14	Transverse Stiffeners - Tank Top	Beam44	AH36	114	5700	38.58	190.0	10	142.5
15	Girders - Tank Top	Shell43	AH36	115	15				
16	Deck Transverse Stiffeners	Beam44	EH36	116	1575	2.95	14.47	5.25	75
17	Side Girders	Shell43	EH36	117	14				
18	Deck Plating (with openings)	Shell43	EH36	118	9.34				
19	Beam Elements for stiffeners at	Beam44	EH36	119	6576	92.56	140.3	8	205.5
20	Beam Elements for the bilge and	Beam44	EH36	120	6576	92.e6	140.e4	8	205.5
21	Vertical Springs - to account for	Combin14	-	see Table 4.2 for spring stiffness					
22	Horizontal Springs - to account for	Combin14	-	see Table 4.2 for spring stiffness					

TABLE 4.2 Spring Stiffness Calculated Based on Stiffness of Adjacent Structure

Description	Spring Direction	Element Type	Real Constant No.	Spring Stiffness N / mm
Deck Centreline Girder	Vertical	5	121	231
Inboard Side Girder	Vertical	5	122	3785
Outboard Side Girder	Vertical	5	123	3012
Outboard Side Girder	Horizontal	6	124	56
Upper & Centre Stringer	Horizontal	6	125	7151
Lower Stringers	Horizontal	6	126	7151
Bottom Girder - Outboard	Vertical	5	127	6508
Bottom Girders	Vertical	5	128	5913
Bottom Centre Line Girder	Vertical	5	129	3631

4.5 FE Model Loads and Boundary Conditions

Loads and Boundary Conditions
Para. 2.6
Para. 3.4

General information on the applied load is provided in Section 3.7. The design ice load was applied as a pressure of 1.556 MPa.

The finite element model boundary conditions are as explained in Section 3.8. Referring to the global co-ordinate system described in Section 4.1, all nodes with Z - co-ordinate of +500 or -500 mm have symmetry boundary conditions along the Z axis. This provides translation restraint in the Z - axis, and rotational restraints in the X and Y axes. All nodes along the bottom centre line have symmetry boundary conditions along the X - axes, i.e., translations restrained in the X and rotations restrained in the Y & Z axes. The nodes along the bottom centre line for the bottom shell plating were also restrained in the Y direction. For the top centre line, all nodes have symmetry boundary conditions along the X - axis.

4.6 FE Model Checks

Finite Element Model Checks
Para. 3.0

Before the finite element model was run, the following prerun checks were performed on the FE model :

- consistent units
- coordinate system
- element attributes and real constants
- boundary conditions and loads

The following prerun checks were conducted using the graphical user interface provided by ANSYS. ANSYS provides a listing of requested information for specifically selected entities. Also, symbols can be turned on/off to view various aspects, such as boundary conditions, loads, element connectivity, etc., of the model.

- nodal coordinates of extremities of model
- free edge plots to check for structural discontinuities
- element shape; aspect ratio, taper, skew, orientation
- shrink plots and element edge plots to check element connectivity
- checks for property assignment to elements - using colour coding based on element type, material type, physical property type, etc.
- element plot showing element coordinate system to check for element orientation
- true scale 3D plot of beam elements to ensure correct beam size, orientation, and offsets
- boundary conditions - using model plots with boundary condition symbols
- pressure load magnitude and direction (using arrows)

The following prerun checks are built into ANSYS, and are performed during the data checking process. Warning or error messages are issued when the model fails to pass the check. The output from such a data check run were reviewed for warning and/or error messages.

- nodes not connected to structure
- elements not connected to structure
- missing material properties
- missing physical properties

- element aspect ratio
- element warping
- element skewness

4.7 FE Solution Option and Procedures

The following solution options and procedures used were:

Solution Options and Procedures Para. 3.5

- New Analysis
- Static Analysis
- No Stress Stiffening
- Small Deflections
- Store all results for all load steps
- Print all output to a listing file

5.0 ANALYSIS RESULTS

5.1 General Solution Checks

The following post-run checks were performed:

General Solution Checks Para. 4.1

- comparison with simple hand calculations to ensure that the results are reasonable (these calculation are included as Annex B-3)
- equilibrium between the applied load and the reactions
- inspection of the displaced shape of the structure to ensure that there were no discontinuities in the model
- inspection of stress contours to ensure the adequacy of the mesh used

All error and warning messages output by the program were investigated and resolved.

The total applied load in the X direction is 4434.9 kN. No forces are applied in the Y and Z directions. The summed reactions in the X, Y and Z directions are 4434.9 kN, 0 kN, and 0 kN respectively.

5.2 Post Processing Methods

The ANSYS graphical post-processor was extensively used to review stress and displacement results. Listings were reviewed to

Post-processing Methods

obtain specific magnitudes for various quantities. In all of the stress contour plots nodal averaging was used. For the shell element used in the model, the nodal values are calculated by extrapolating from the values at the integration points.

Para. 4.2
Para. 4.3
Para. 4.4

5.3 Structural Response

FEA Results and Acceptance Criteria
Para. 5.1

The deflected shape of the structure is shown in Figure 5.1, where the displacements are scaled up by a factor of 20. The maximum vertical displacement at the top centre line of the vessel is 124 mm. The maximum horizontal displacement is 51.08 mm and occurred on the inner shell in the vicinity of the load application. The out of plane displacement, which was relatively small at 1.96 mm, occurred in the diaphragm between the side shell and the opening, also in the area of load application. This displacement occurred between two stiffeners indicating a possible location for shear buckling. This possibility should be checked using classical methods.

The Von Mises stress plot for the area of interest is shown in Figure 5.2. The contours are arranged such that colour orange indicated stresses past yield (355 MPa) in all areas except the outer shell. Dark red shading is used to indicate stresses past yield (500 MPa) in the outer shell. It is clear from the figure that at the applied load the overall structure remains elastic, except for a small area around the openings where the stresses are past-yield. The maximum stress recorded here is 573 MPa.

Figure 5.3 shows contours of bending stress, Sy. The outer shell is in compression with a maximum compressive stress of 307 MPa. The inner shell has a maximum tensile stress of 330 MPa. High bending stresses, past yield stress, were again observed around openings. Clearly the bending stresses in the outer and the inner shells are below the yield stress.

A contour plot of shear stresses in the diaphragm is shown in Figure 5.4. The maximum and minimum stresses recorded were 188 and 164 MPa respectively. The yield stress in shear being 205 MPa, the structure remains elastic at the applied load. Figure 5.5 contains an enlarged view of shear stresses around the opening which is directly under the load. The stress concentrations around the opening are clearly visible in the figure.

The smoothness of the contours suggests that the mesh density is probably adequate for the purposes of this study.

6.0 CONCLUSIONS

Overall Assessment Para. 5.5

The midbody framing section of the 50000 DWT tanker as designed and analyzed meets the acceptance criteria. At the applied load, the structure remains predominantly elastic except in a very localized region around openings. The tendency towards an out-of-plane displacement in the diaphragm, between two stiffeners in the area of an opening, could result in instability at higher loads. This needs further investigation.

7.0 REFERENCES

1. PROPOSED EQUIVALENT STANDARDS FOR THE CONSTRUCTION OF ARCTIC CLASS SHIPS; Arctic Ship Safety, (AMNB) Canadian Coast Guard - Northern; Dated March 1993.

2. Arctic Tanker Structural Requirement Evaluation MIDSHIP SECTIONS, BOW SECTIONS AND REPAIR DRAWINGS; AA Shipping Company Limited; Dated June 1994.

3. LLOYD'S REGISTER - RULES FOR THE MANUFACTURE, TESTING AND CERTIFICATION OF MATERIALS; Dated January 1993

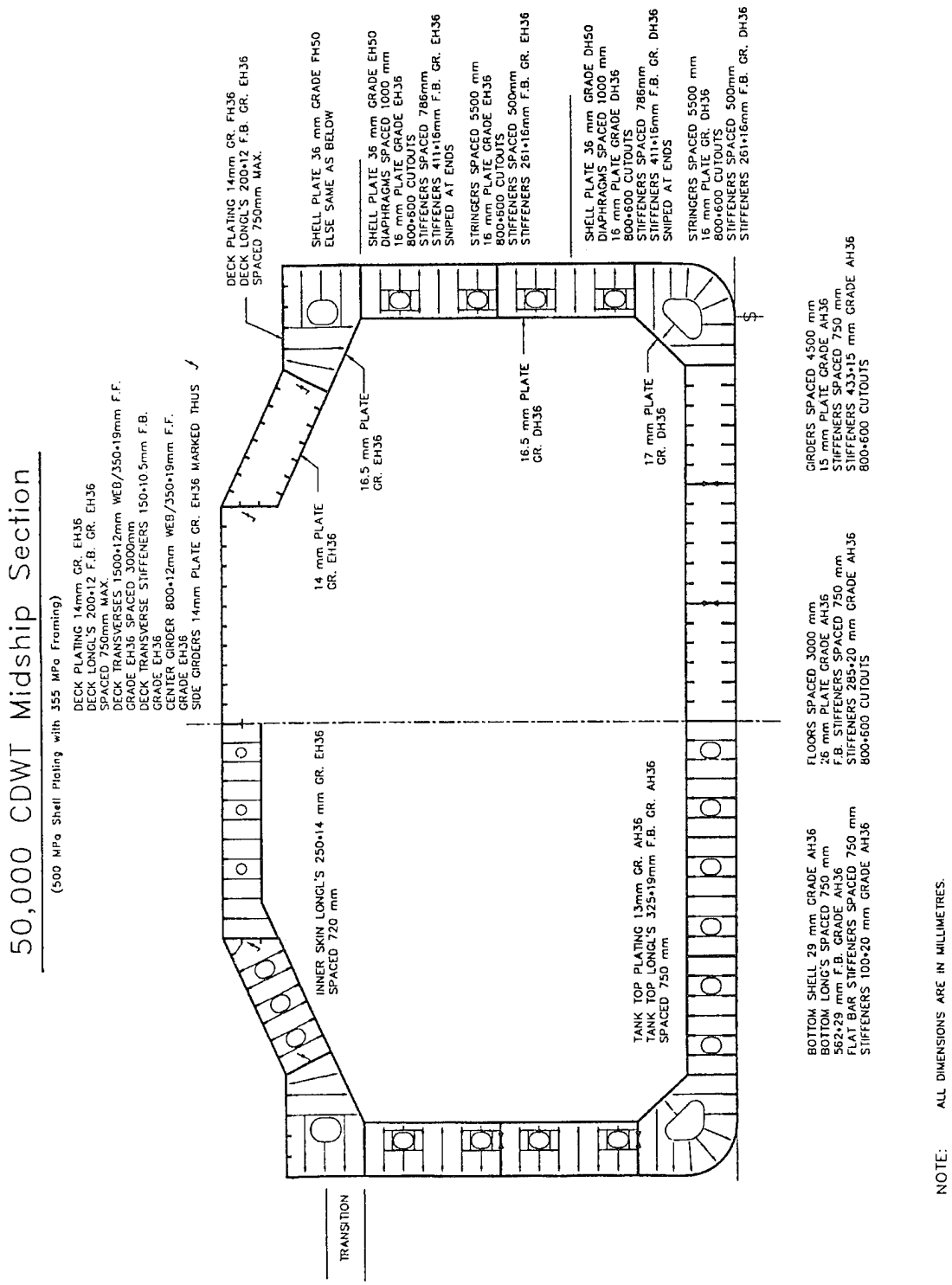

FIGURE 3.1 **Midbody Web Frame**

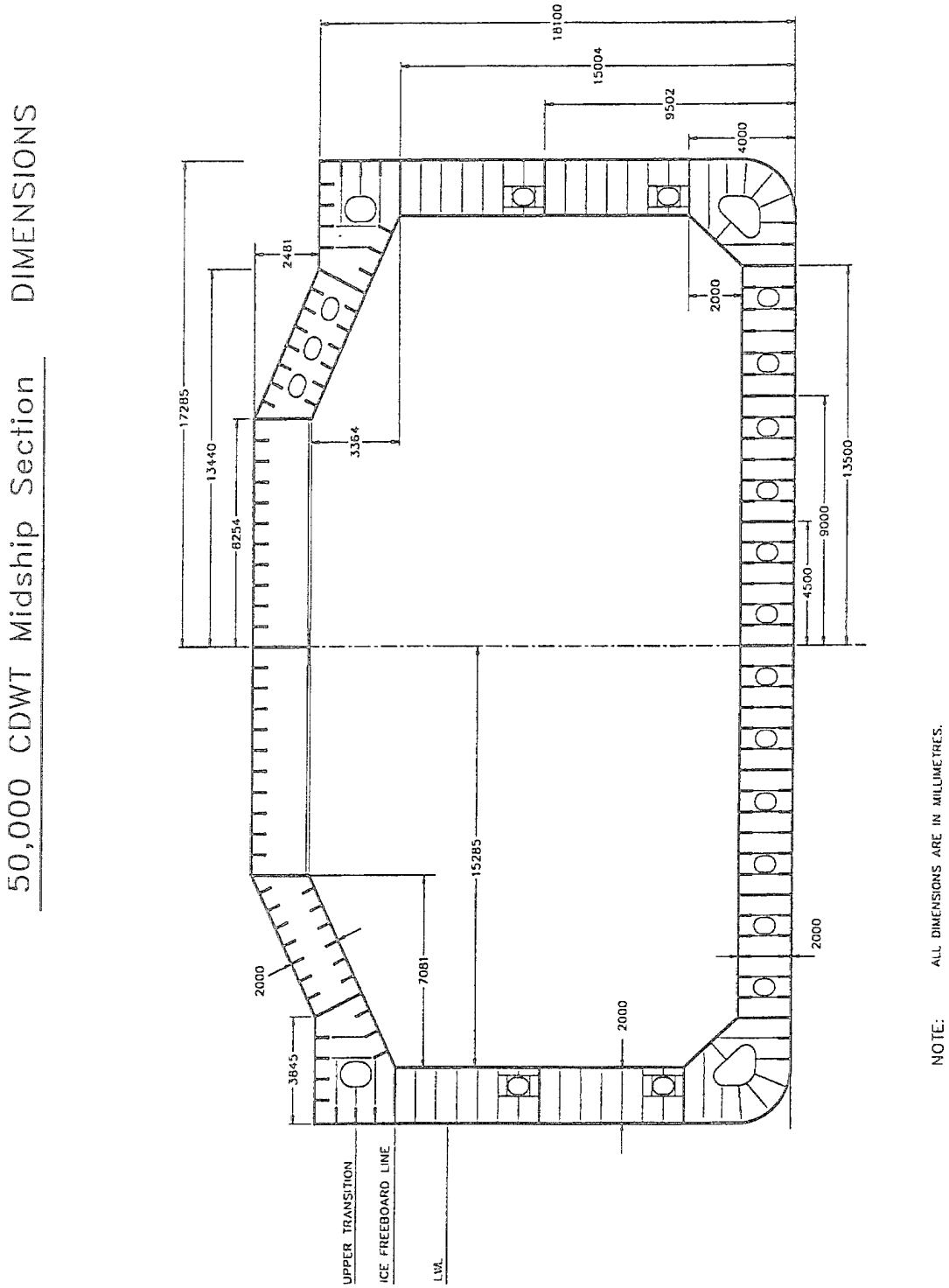

FIGURE 3.2 Outer Dimensions of Web Frame

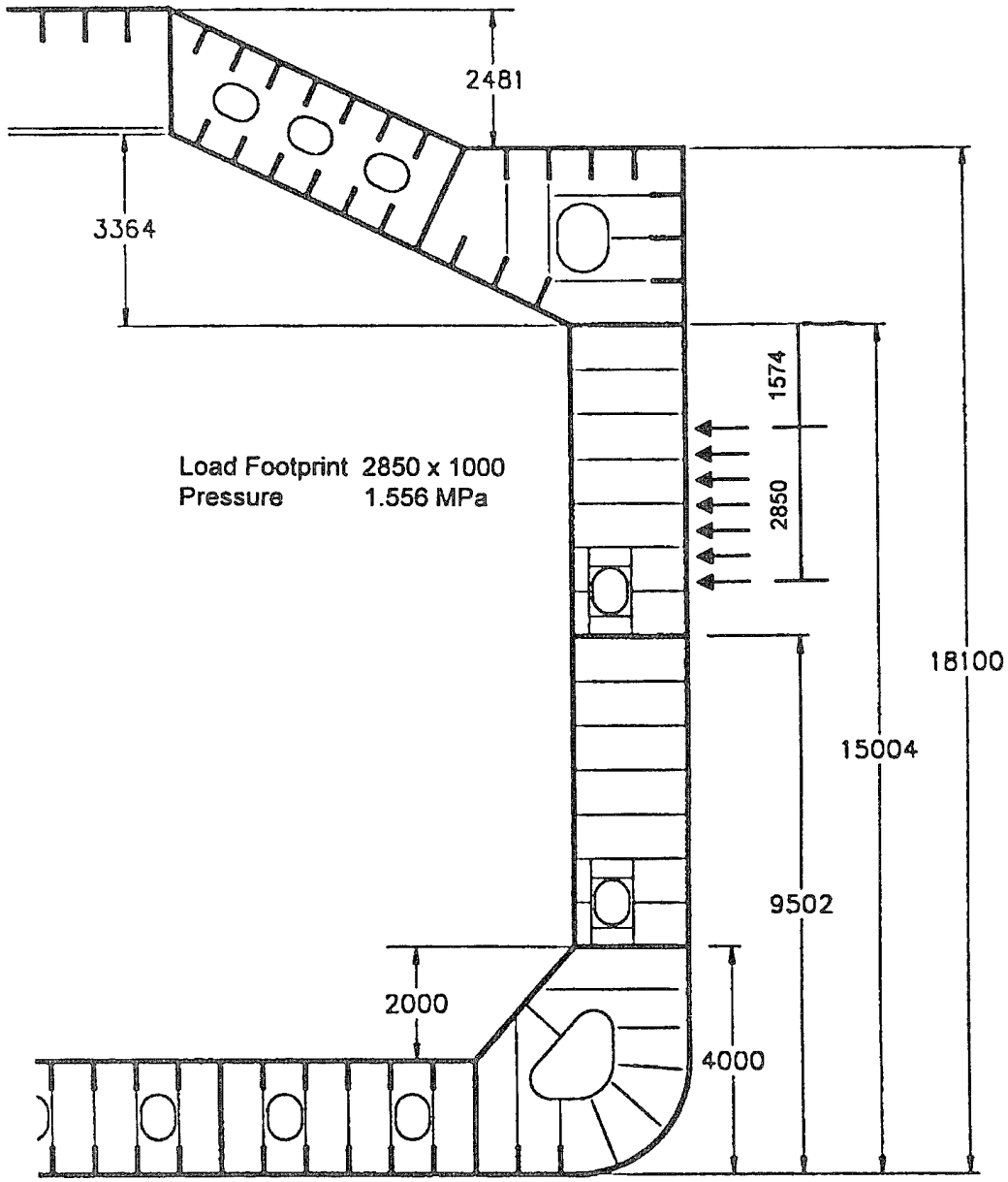

FIGURE 3.3 Characteristics of Load

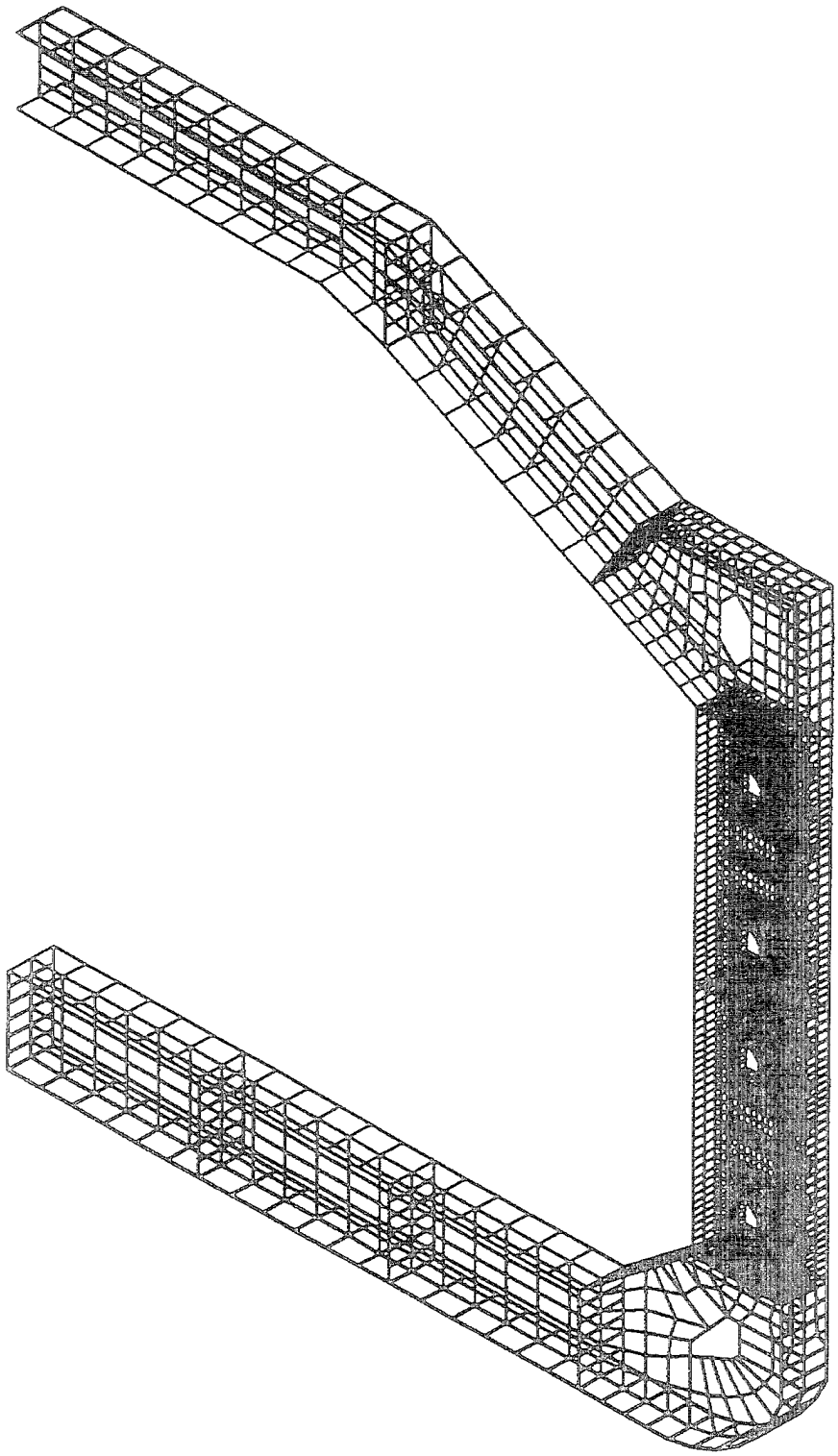

FIGURE 4.1 Finite Element Model of Web Frame

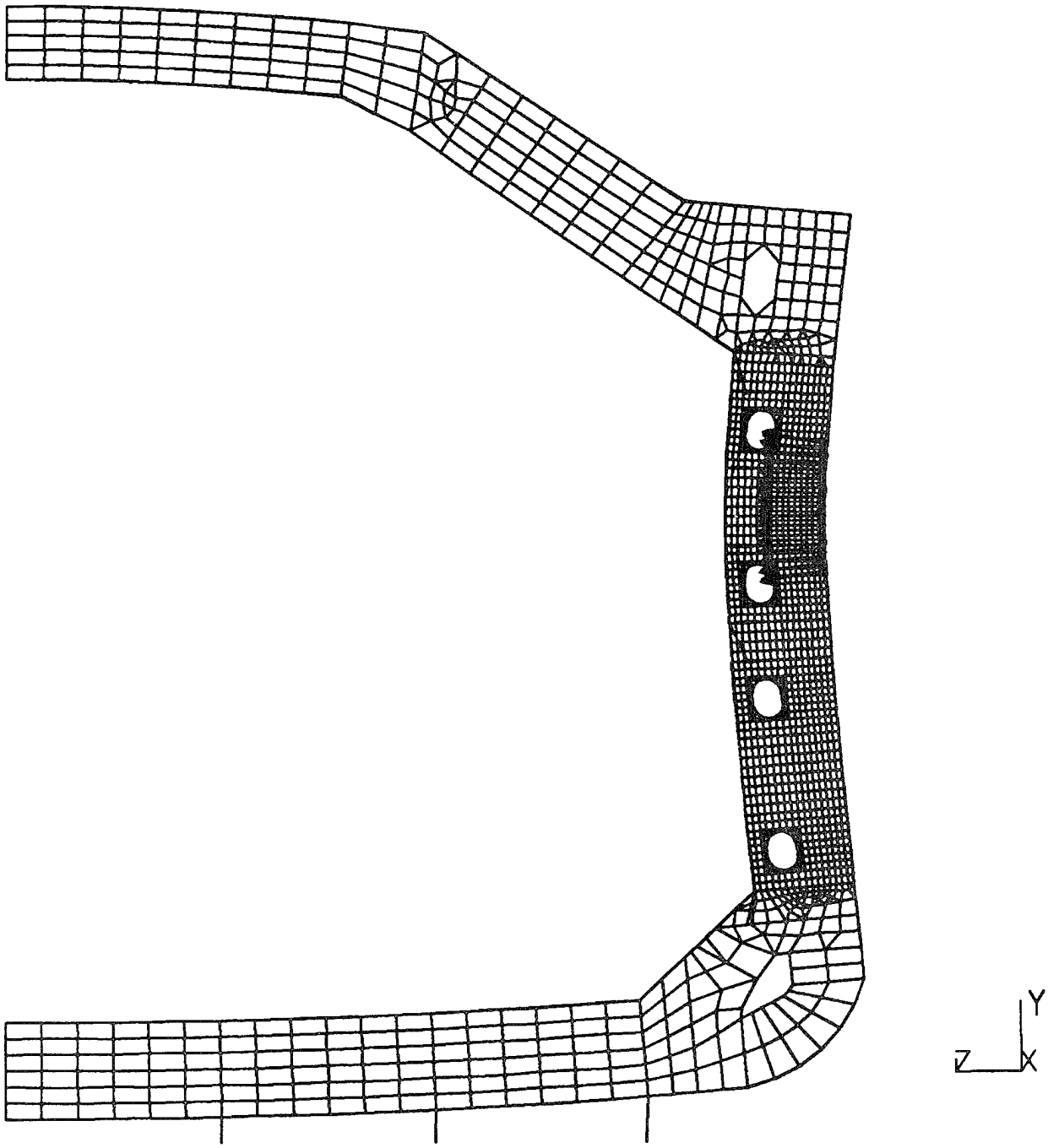

FIGURE 5.1 Deflected Shape of Web Frame

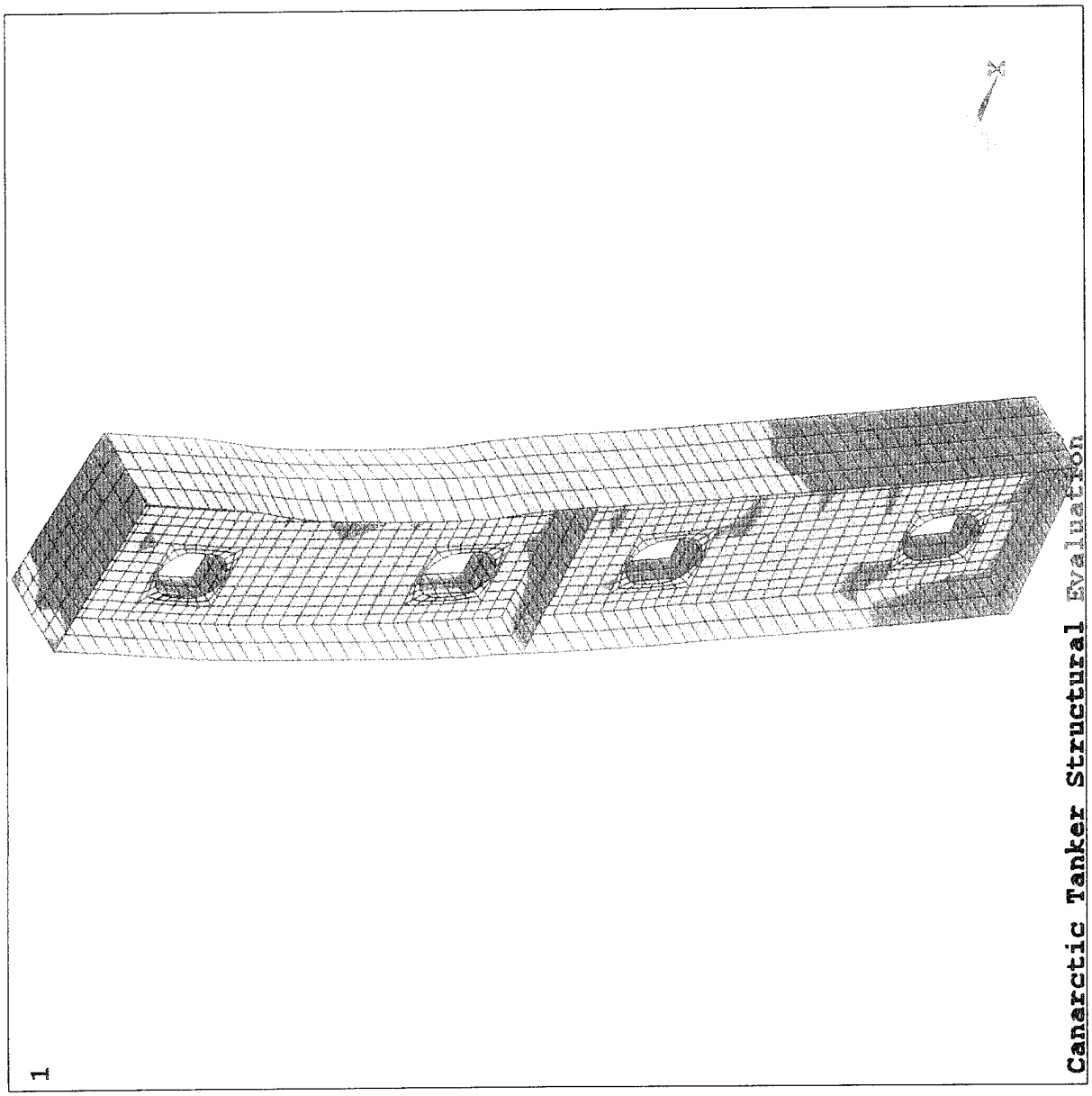

FIGURE 5.2 Von Mises Stress Plot

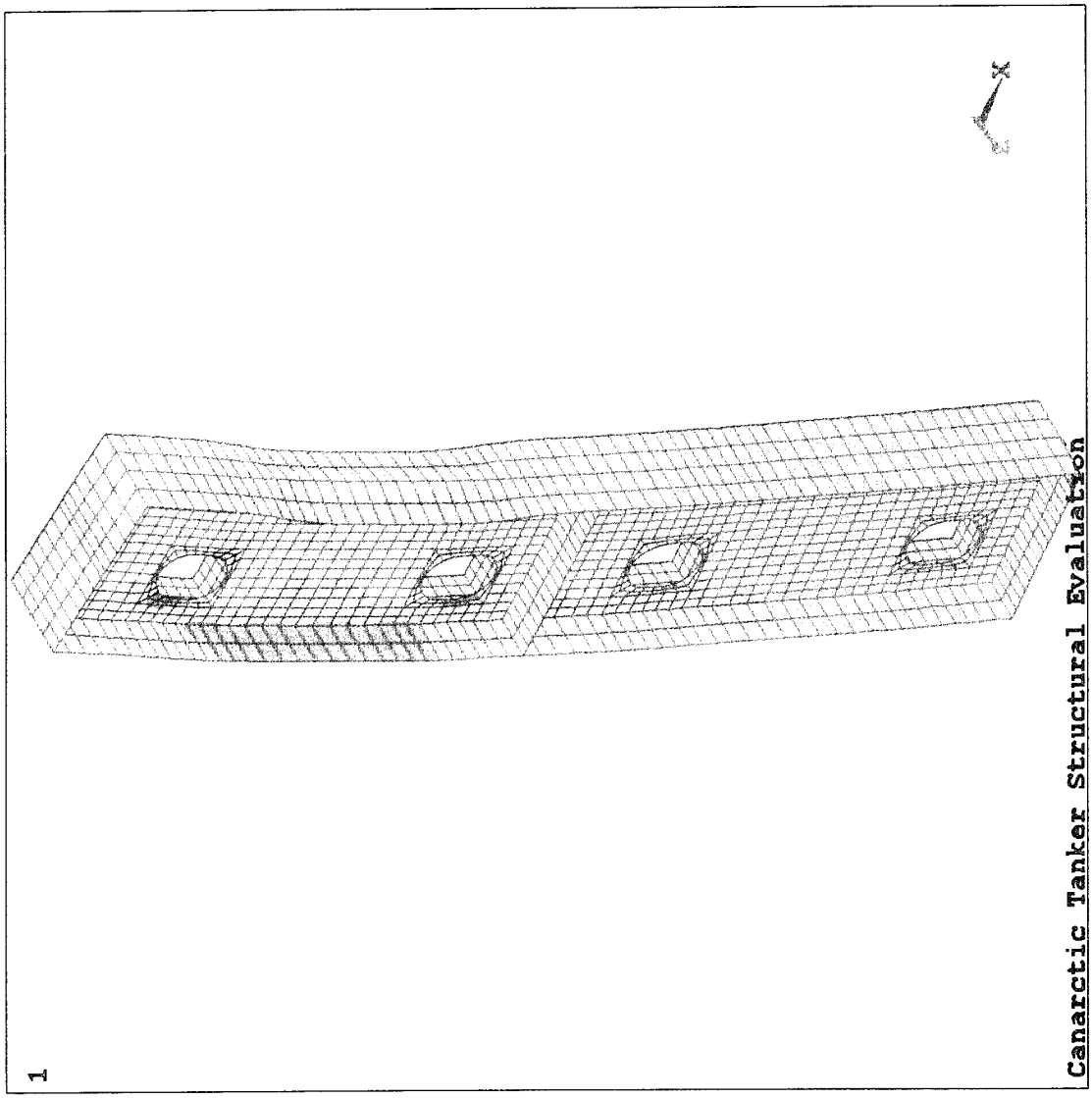

FIGURE 5.3 **Bending Stresses**

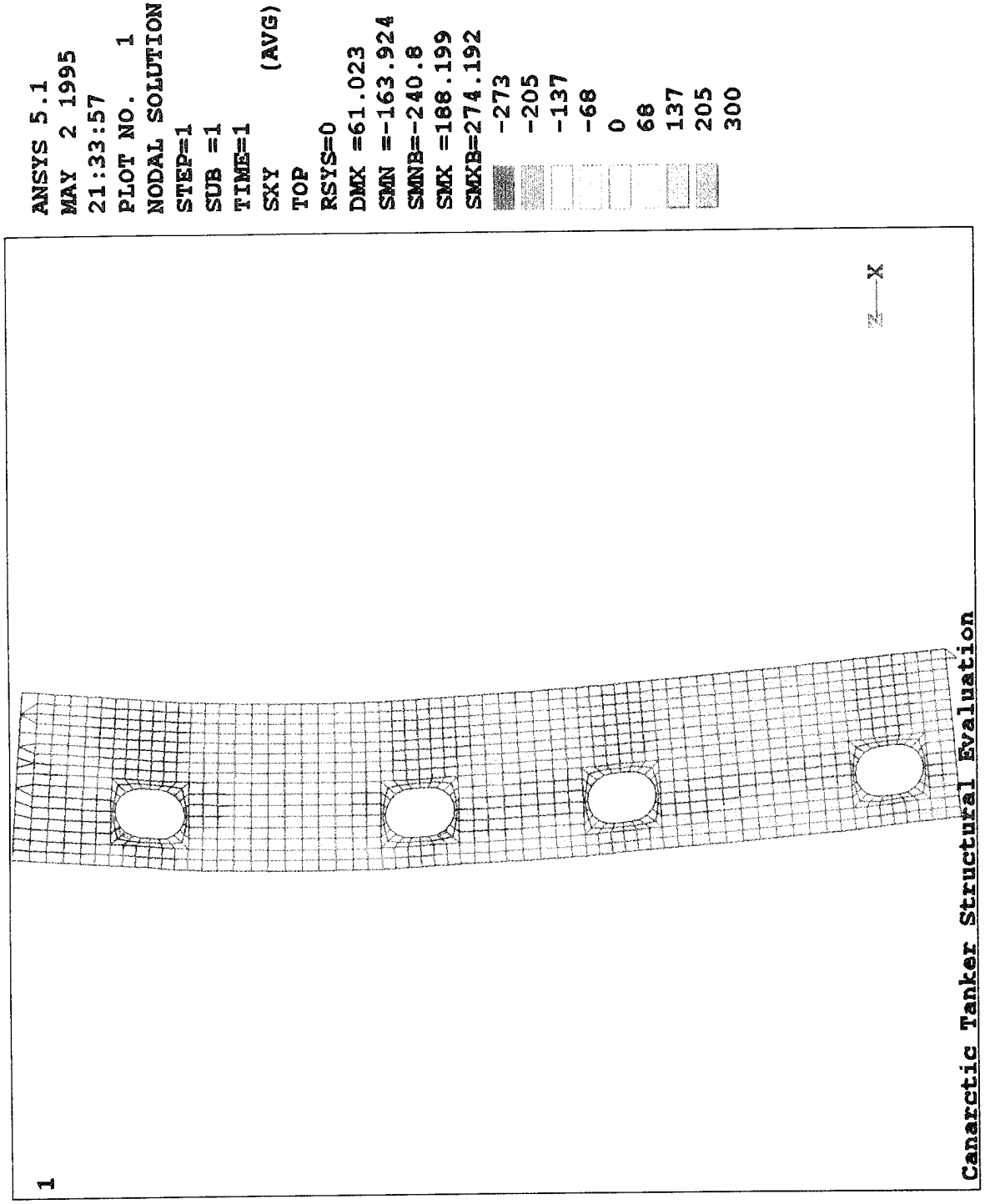

FIGURE 5.4 Shear Stresses in Diaphragm

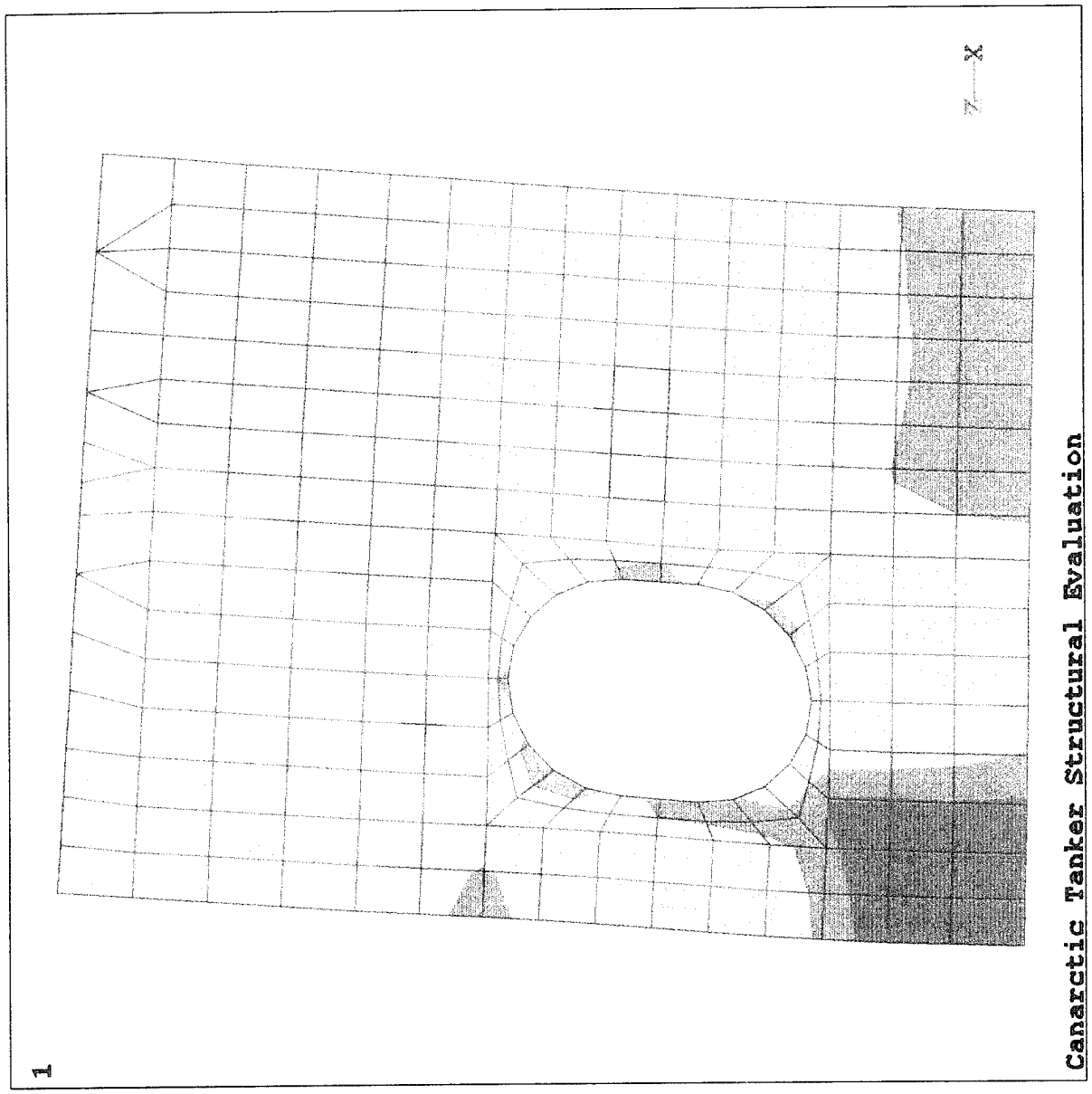

FIGURE 5.5 Shear Stresses Around Opening

Annex B-2

Company and Personnel Qualifications

B-2 COMPANY AND PERSONNEL QUALIFICATIONS

B-2.1 Contractor Qualifications

BB Engineering (BBE) is an ISO 9001 compliant company with a firm commitment to quality. It is also certified by the Association of Professional Engineers of Ontario. BBE's primary business is Ship Design and Analysis. It has several qualified professional structural engineers and naval architects on its staff.

BBE performs all its finite element analysis on either a DecStation 5000, running on Ultrix operating system, or on a 60 MHz, 486 PC. For the current analysis the DecStation 5000 was used. The finite element software used is called "ANSYS". ANSYS is a well established finite element software with a large user base. It has been successfully used by BBE in several of its ship structure finite element analyses. ANSYS provides all the required features for the current task and hence deemed adequate.

B-2.2 Personnel Qualifications

Analyst
Mr. J. S. is the finite element analyst assigned to this task. He has a Ph.D. in Structural Engineering, and is registered as a Professional Engineer in the province of Ontario. He has taken two courses in finite element analysis at the graduate level, and has eight years experience in using finite element method as an analysis tool. JS has a total of five years experience in using ANSYS, out of which three years are ship structure specific. Information on specific finite element analysis problems that JS has worked on in the past is available on request.

Checker
Ms. J. B. is the project engineer for this project, and holds the responsibility of checking the finite element analysis. JB has a Masters' Degree in Structural Engineering, and is registered as a Professional Engineer in the province of Ontario. She has taken one graduate level course in finite element analysis, and has six years experience in finite element analysis. JB has gained ten years experience in the design and analysis of ship structures, and has supervised several finite element analysis projects. JB has three years experience in using ANSYS. Information on projects that JB has worked in the past is available on request.

Annex B-3

FEA Results Verification

B-3 FEA RESULTS VERIFICATION

The FEA results were compared with hand calculations. Two analyses have been performed as follows:

Accuracy Assessment Para. 5.4

1. An elastic beam analysis of the frame with a span of 11000 millimetres, ends fixed, openings ignored, subjected to a uniformly distributed load of length 2850 millimetres equal to 3.112 MN/m (9.373*0.8*0.5*0.83), for a total load of 8869 kN.

   The structure has a bending stress of 550 MPa at the top support in the inner hull plating. Shear stresses in the portion of structure above the load are 195 MPa.

   This structure reached first yield (in bending) at a load of approximately 5700 kN.

2. An elastic frame analysis of the structure was FE modelled, except that the inner shell and bottom structure was analyzed with a flange width equal to 40 times the plate thickness and the frame was assumed to be fixed on centreline at the deck and at the bottom. In this analysis side sway of the frame was ignored. The bending moments calculated were within a few percent of those found in the first analysis.

   By comparison the FEA predicts first yield, of the inner hull plating at the top of the 11000 mm portion of the side shell framing at a load of approximately 4835 kN. This comparison suggests that the FEA results are broadly consistent with the results from the approximate simplified analyses.

Annex B-4

Sample Completed Assessment Methodology Forms

EVALUATION OF FINITE ELEMENT MODELS AND RESULTS

Project #: *XXXX*

Project Title: *Finite Element Analysis of Arctic Tamker Web Frame*

Project Description: *Linear, static analysis of web frame tp ensure adequacy of frame ice load*

Contractor: *BB Engineering Ltd.*

Result of Evaluation: *Generally satisfactory. Final approval subject to the supply of data on some details of the model*

Evaluator: *John Doe*

Date: *May 1995*

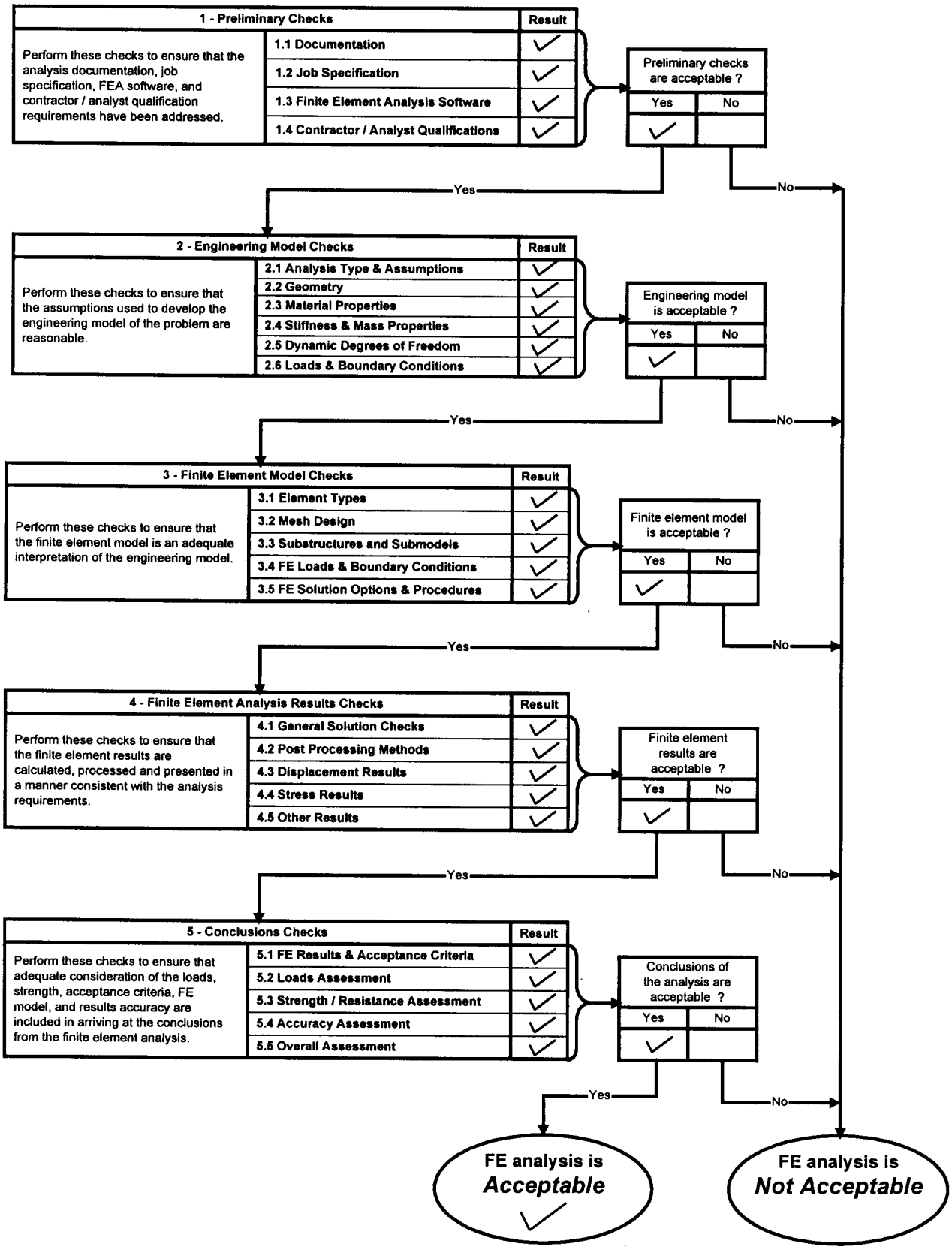
1 - Preliminary Checks
Result
Perform these checks to ensure that the analysis documentation, job specification, FEA software, and contractor / analyst qualification requirements have been addressed.
1.1 Documentation
1.2 Job Specification
1.3 Finite Element Analysis Software
1.4 Contractor / Analyst Qualifications
Preliminary checks are acceptable ?
Yes
No
Yes
No
2 - Engineering Model Checks
Result
Perform these checks to ensure that the assumptions used to develop the engineering model of the problem are reasonable.
2.1 Analysis Type & Assumptions
2.2 Geometry
2.3 Material Properties
2.4 Stiffness & Mass Properties
2.5 Dynamic Degrees of Freedom
2.6 Loads & Boundary Conditions
Engineering model is acceptable ?
Yes
No
Yes
No
3 - Finite Element Model Checks
Result
Perform these checks to ensure that the finite element model is an adequate interpretation of the engineering model.
3.1 Element Types
3.2 Mesh Design
3.3 Substructures and Submodels
3.4 FE Loads & Boundary Conditions
3.5 FE Solution Options & Procedures
Finite element model is acceptable ?
Yes
No
Yes
No
4 - Finite Element Analysis Results Checks
Result
Perform these checks to ensure that the finite element results are calculated, processed and presented in a manner consistent with the analysis requirements.
4.1 General Solution Checks
4.2 Post Processing Methods
4.3 Displacement Results
4.4 Stress Results
4.5 Other Results
Finite element results are acceptable ?
Yes
No
Yes
No
5 - Conclusions Checks
Result
Perform these checks to ensure that adequate consideration of the loads, strength, acceptance criteria, FE model, and results accuracy are included in arriving at the conclusions from the finite element analysis.
5.1 FE Results & Acceptance Criteria
5.2 Loads Assessment
5.3 Strength / Resistance Assessment
5.4 Accuracy Assessment
5.5 Overall Assessment
Conclusions of the analysis are acceptable ?
Yes
No
Yes
No
FE analysis is Acceptable
FE analysis is Not Acceptable

FINITE ELEMENT ANALYSIS ASSESSMENT		PRELIMINARY CHECKS
Project No. *XXXX*	Project Title : *FEA of Arctic Tanker Web Frame*	
Contractor Name: *BB Engineering Ltd*		Date : *May 1995*
Analyst : *JS*	Checker : *JB*	

1.1 Documentation Requirements

Finite Element Analysis Assessment Check	Refer to Guideline Section	Result	Comments
1.1.1 Has the following information been provided in the FEA documentation?	3-1.1		
a) Objectives and scope of the analysis.		✔	
b) Analysis requirements and acceptance criteria.		✔	
c) FEA software used.		✔	
d) Description of physical problem.		✔	
e) Description of engineering model.		✔	
f) Type of analysis.		✔	
g) System of units.		✔	
h) Coordinate axis systems.		✔	
i) Description of FEA model.		✔	
j) Plots of full FEA model and local details.		✔	*Some detail missing**
k) Element types and degrees of freedom per node.		✔	
l) Material properties.		✔	
m) Element properties (stiffness & mass properties).		✔	
n) FE loads and boundary conditions.		✔	
o) Description and presentation of the FEA results.		✔	
p) Assessment of accuracy of the FEA results.		✔	
q) Conclusions of the analysis.		✔	
r) List of references.		✔	

Based on the above checks answer Question 1.1 and enter result in Figure 1.0.	*Result*
1.1 Is the level of documentation sufficient to perform an assessment of the FEA?	✔

Comments

**Request additional detail on stiffener/web connection*

1.2 Job Specification Requirements

Finite Element Assessment Check	Refer To Guideline Section	Result	Comments
1.2.1 Is the job specification identified and referenced in the analysis documentation?	3-1.2	✔	
1.2.2 Are the objectives and scope of the analysis clearly stated and are they consistent with those of the job specification?	3-1.2	✔	
1.2.3 Are the analysis requirements clearly stated and are they consistent with those of the job specification?	3-1.2	✔	
1.2.4 If certain requirements of the job specification have not been addressed (such as certain load cases), has adequate justification been given?	3-1.2	*N/A*	
1.2.5 Are the design / acceptance criteria clearly stated and are they consistent with those of the job specification?	3-1.2	✔	
1.2.6 Is there reasonable justification for using FEA for this problem?	3-1.2	✔	
1.2.7 Has advantage been taken of any previous experimental, analytical, or numerical works that are relevant to this problem?	3-1.2	*N/A*	

Based on the above checks answer Question 1.2 and enter result in Figure 1.0.	*Result*
1.2 Does the analysis address the job specification requirements?	✔
Comments	

1.3 Finite Element Analysis Software Requirements

Finite Element Analysis Assessment Check	Refer To Guideline Section	Result	Comments
1.3.1 Is the FEA software on the list of approved programs for ship structural analysis applications?	3-1.3	✔	
If the answer to Check 1.3.1 is "Y", you may skip Checks 1.3.2 and 1.3.3.			
1.3.2 Are the capabilities and limitations of the FEA software used to perform the required analysis stated in the analysis documentation?	3-1.4	✔	
1.3.3 Is evidence of this capability documented and available for review (eg. verification manual, results of ship structure FEA benchmark tests, previous approved FEA of similar problems)?	3-1.3	✔	
1.3.4 Does the vendor of the FEA software have a quality system to ensure that appropriate standards are maintained in software development and maintenance.		✔	

Based on the above checks answer Question 1.3 and enter result in Figure 1.0.	***Result***
1.3 Is the FEA software qualified to perform the required analysis?	✔
Comments	

1.4 Contractor / Personnel Qualification Requirements

Finite Element Assessment Check	Refer To Guideline Section	Result	Comments
1.4.1 Do the contractor personnel have adequate academic training and experience qualifications to perform finite element analysis?	3-1.5	✓	
1.4.2 Do the contractor personnel have adequate engineering experience qualifications for performing ship structural design or analysis?	3-1.5	✓	
1.4.3 Do the contractor and contractor personnel have adequate professional certification qualifications?	3-1.5	✓	
1.4.4 Does the contractor have a working system of Quality Assurance (QA) procedures and checks that are satisfactory for the requirement?	3-1.5	X	*Not documented but using well established software*
1.4.5 Do the contractor personnel have adequate experience with the FEA software used for the analysis?	3-1.5	✓	

Based on the above checks answer Question 1.4 and enter result in Figure 1.0.	Result
1.4 Is the contractor adequately qualified for performing ship structure FEA?	✓
Comments	

FINITE ELEMENT ANALYSIS ASSESSMENT		ENGINEERING MODEL CHECKS
Project No. *XXXX*	Project Title : *FEA of Arctic Tanker Web Frame*	
Contractor Name: *BB Engineering Ltd*		Date : *May 1995*
Analyst : *JS*	Checker : *JB*	

2.1 Analysis Type and Assumptions

Finite Element Analysis Assessment Check	Refer To Guideline Section	Result	Comments
2.1.1 Does the engineering model employ enough dimensions and freedoms to describe the structural behaviour (eg. 1-D, 2-D, or 3-D)?	3-2.1	✔	
2.1.2 Does the engineering model address the appropriate scale of response for the problem (eg. global, intermediate, or local response)?	3-2.1	✔	
2.1.3 Is the type of analysis appropriate for the type of response and loading of interest (eg. linear, static, dynamic, buckling analysis)?	3-2.1	✔	
2.1.4 Does the engineering model address all the required results parameters (eg. stress, displacement, frequency, buckling load)?	3-2.1	✔	
2.1.5 Are all assumptions affecting the choice of engineering model and analysis type justified (watch for non-standard assumptions)?	3-2.1	✔	
2.1.6 Is the level of detail, accuracy or conservatism of the engineering model appropriate for the criticality of the analysis and type of problem?	3-2.1		*Appears marginal - may require more data on results to complete evaluation*
2.1.7 Does the analysis employ a consistent set of units?	3-2.1	✔	
2.1.8 Does the analysis employ a consistent global coordinate axis system?	3-2.1	✔	

Based on the above checks answer Question 2.1 and enter result in Figure 1.0.	***Result***
2.1 Are the assumptions of the type of analysis and engineering model acceptable?	✔
Comments *See above*	

Appendix C

Examples of Variations in FEA Modelling Practices and Results

Example	Title	Page
C1	Stiffened Panel	C-3
C2	Multiple Deck Openings	C-17
C3	Mast	C-25

INTRODUCTION

The purpose of this Appendix is to illustrate the effect of varying certain FEA modelling parameters on the results using typical ship structure example problems.

Three typical ship structure examples are used. The first example, presented in Section C1, concerns the modelling of stiffened panels. Four different approaches for modelling stiffened panels are considered and the results presented. In the second example, presented in Section C2, the modelling of stress concentrations arising from openings in a deck structure is considered. In the third example, presented in Section C3, variations in the approach to modelling a truss type mast structure are illustrated. A brief introduction is provided for each problem, followed by a pictorial overview of the FEA model and results. A brief discussion of the results is provided at the end of each example.

It is not the intention of this Appendix to endorse any particular modelling method. Rather, it represents an effort to illustrate various modelling practices and present the variations in results. This should provide some insight into the consequences of adopting a particular modelling approach. The choice of the appropriate method, for a given problem, depends on the purpose and objectives of the FEA.

In all cases the ANSYS program was used. The following element types were used:

- four-node membrane shell elements
- four-node shell elements with bending capabilities
- eight-node shell elements with bending capabilities
- two-node 3-D beam elements
- two-node 3-D truss elements
- mass elements

In certain cases converged solutions are referred to. These solutions result from very fine mesh models which are known to have converged (by comparison with less fine mesh models).

C1.0 STIFFENED PANEL

The majority of the structural weight in conventional ship structures is stiffened panels that comprise the shell, decks, bulkheads and superstructure. The panels are stiffened with structural sections that are usually spaced in a regular fashion. The appropriate modelling approach for stiffened panels depends on both the scale of the response (ie. local or global response) and the main structural actions of interest. Two main structural actions typically modelled are 1) bending action due to loading normal to the panel surface, and 2) membrane action due to loading in the plane of the panel. The first part of this section deals with bending action and hence focusses on stiffened plate subjected to transverse loading. Membrane action in a stiffened plate as a result of in-plane loads is briefly examined in the second part.

FEA Example No. 1	**Title :** Stiffened Panel - Transverse Loading

Problem Description:

There are various techniques available for modelling stiffened panels. The choice of a particular technique depends on the purpose of the analysis. Using a simple stiffened panel structure, the differences in the accuracy of stress and deflection results for some of these techniques are examined.

Engineering Model :

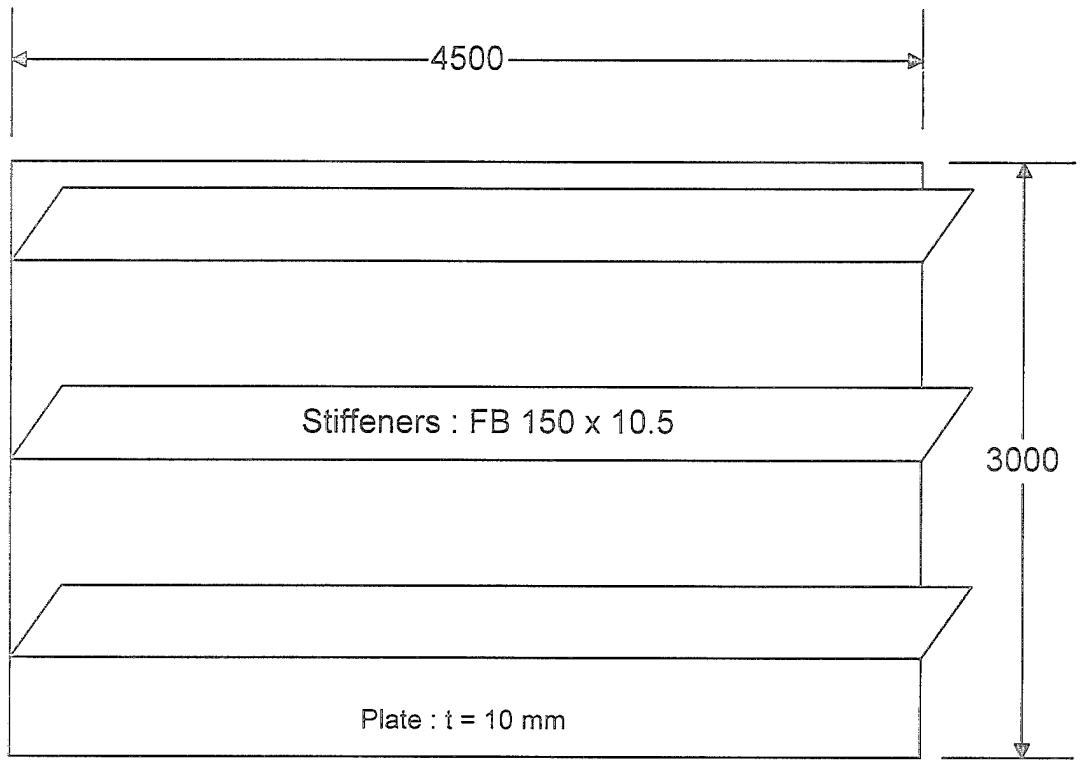

Material Properties :	Geometric Properties :	Loading :
$E = 207 \times 10^3$ MPa $\nu = 0.3$	Plate t = 10 mm Stiffeners 150 x 10.5 FB	$P_z = 15000$ Pa

Modelling Features : Four modelling approaches are considered:

1. Modelling stiffeners with off-set beams (beam properties defined at beam centroid which is rigidly off-set from plane of plate);
2. Modelling stiffeners with in-plane beams (beam properties includes an effective width of plating and are defined at beam centroid which is in the plane of the plate);
3. Explicit modelling of stiffeners using shell elements; and
4. Modelling the plate with orthotropic material properties (in-plane loads / membrane action only)

FEA Example No. 1	Title : Stiffened Panel - Transverse Loading

Finite Element Models :

A total of 12 FE models, grouped into four sets, were studied. Each set contained three models representing the three modelling techniques. The mesh and element types are as follows :

Set 1	4x4 element mesh; 4 noded elements
Set 2	8x8 element mesh; 4 noded elements
Set 3	16x16 element mesh; 4 noded elements
Set 4	16x16 element mesh; 8 noded elements

All models are fully fixed along the four edges. A uniform transverse pressure load of 15 kN/m^2 is applied.

For the in-plane beam models the effective width of plating was assumed to be 40t, where t is the thickness of the plate. The inertia properties of the beam were calculated based on stiffener and an effective width of plating. However, for the area, the area of the stiffener alone was input.

	Nodes	Elements	Degrees of freedom
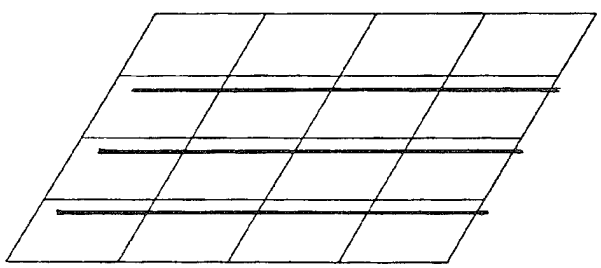	25	28	150

Example 1a - Offset Beams

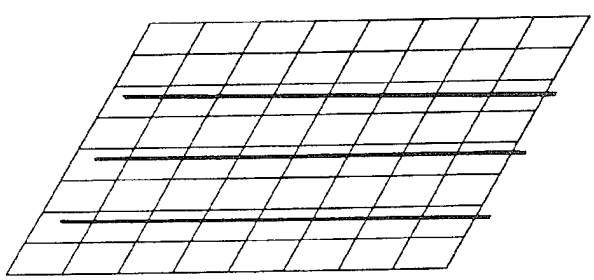	81	88	486

Example 1b - Offset Beams

FEA Example No. 1	Title : Stiffened Panel - Transverse Loading

Finite Element Models :

	Nodes	Elements	Degrees of freedom
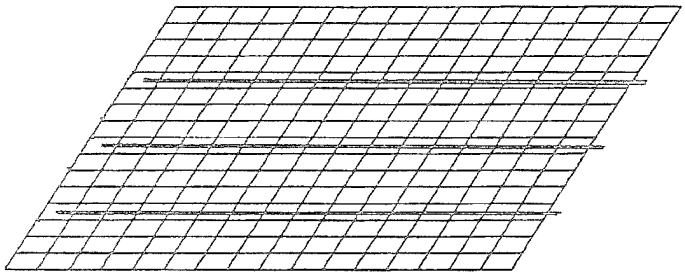 Example 1c - Offset Beams	289	304	1734
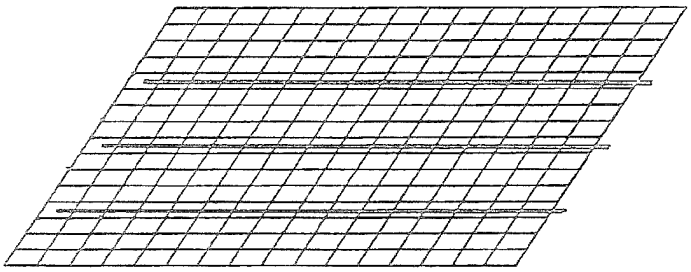 Example 1d - Offset Beams	833	352	4230
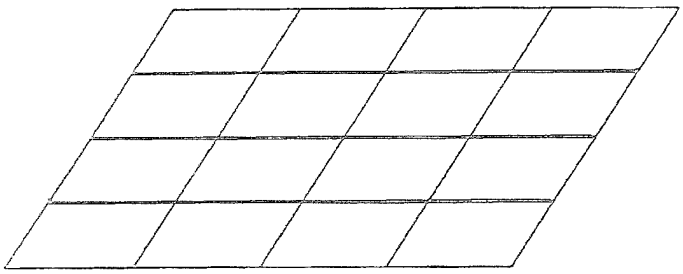 Example 1e - In-plane Beams	25	28	150
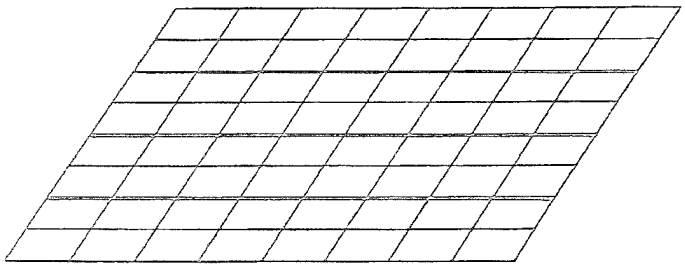 Example 1f - In-plane Beams	81	88	486

FEA Example No. 1	Title : Stiffened Panel - Transverse Loading

Finite Element Models :

	Nodes	Elements	Degrees of freedom
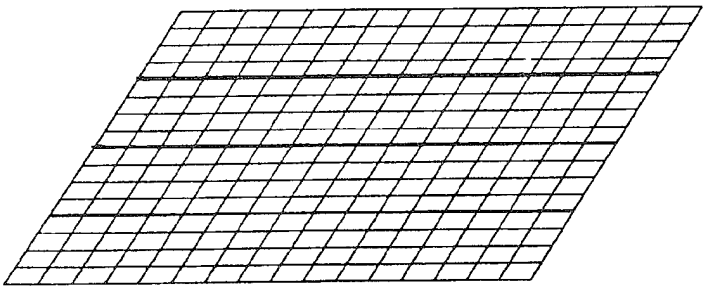	289	304	1734
Example 1g - In-plane Beams			
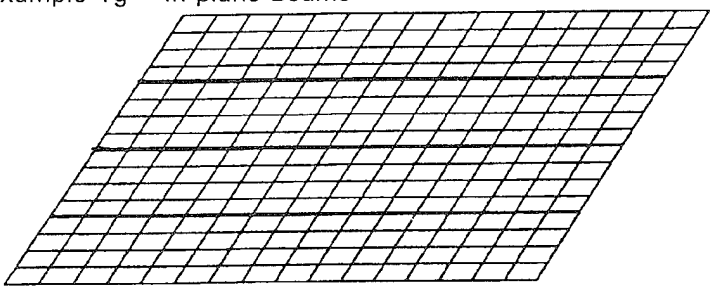	833	352	4230
Example 1h - In-plane Beams			
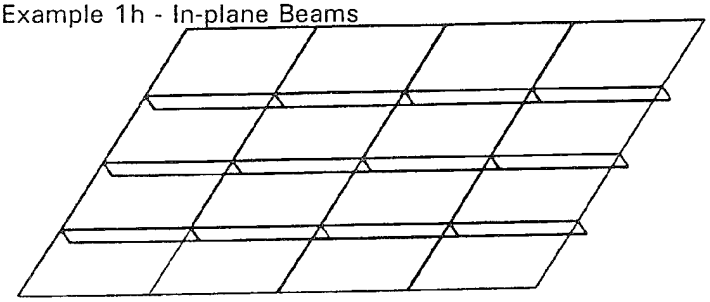	40	28	240
Example 1i - All plate elements			
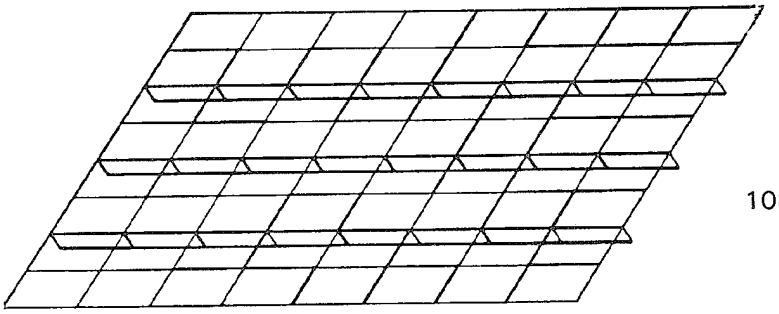	108	88	648
Example 1j - All plate elements			

FEA Example No. 1	Title : Stiffened Panel - Transverse Loading

Finite Element Models :

	Nodes	Elements	Degrees of freedom
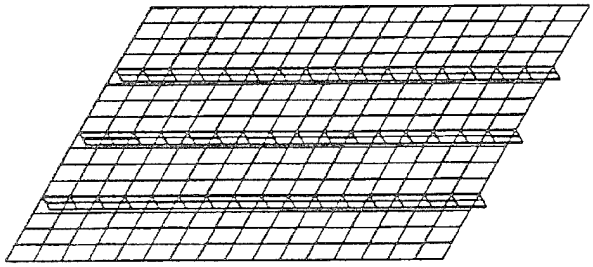 Example 1k - All plate elements	391	352	2346
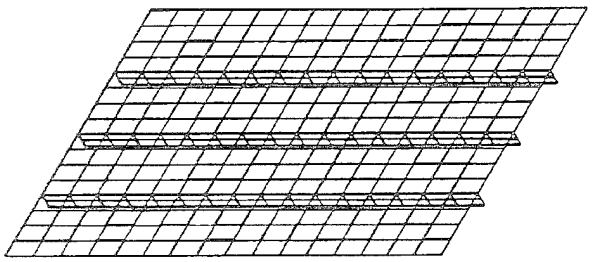 Example 1l - All plate elements	1133	352	5886

FEA Example No. 1	Title : Stiffened Panel - Transverse Loading

DISCUSSION OF RESULTS

Key results are summarized in Table C1.1. The maximum vertical deflection is at the centre of the panel (see Figure C1.1). The peak stresses reported in the table are at the ends of the central stiffener (at supports) . The three mode shapes associated with the three frequencies are shown in Figure C1.2. Figure C1.3 shows the longitudinal stress contours for the plate and the stiffeners.

Figure C1.4 summarizes the deflection results for all twelve models. From Figure C1.4 it is evident that the deflection solution starts to converge for an 8x8 mesh. Figure C1.4 also shows the stress results in the stiffener. Some general observations for the three modelling types are :

In-Plane Beams: Despite the approximation of 40t as the effective width of plating this method seems to provide the most economical solution for deflection prediction. The same is true even for stress prediction.

Offset Beams: Deflection decreases with mesh refinement contrary to the expectation that displacement-based FEA model becomes more flexible with more elements. This is probably due to the presence of a spurious moment generated at the ends of the stiffener as a result of two axial forces (in the plate and in the beam) being offset. However, with mesh refinement this effect tends to diminish resulting in reasonable predictions of deflections.

All Plate Elements: In this case the performance approaches that of the in-plane beam models with an 8x8 mesh.

All three techniques predict natural frequencies and mode shapes fairly well.

In modelling stiffeners as in-plane beams, the greatest uncertainty is the choice for the effective breadth of plating. The most important parameter which determines effective breadth of plating is the ratio of actual flange width to the length between points of zero bending moment. The effective breadth of plating can be estimated from charts (see, for example, Hughes[1]). Another important aspect to note with this technique is that the effective breadth thus used is only effective at the location of maximum bending moment. However, for design purposes the stresses at the section of maximum bending moment is of most importance.

In conclusion, the approach recommended will depend on the nature of the analysis. If the plate-stiffener combination is subjected to transverse loading, modelling stiffeners with in-plane beams provides the most economical approach in terms of overall stiffness, and stresses in the stiffener at the location of maximum bending moment. When more detailed stress information is required then the explicit modelling of the stiffener with plate elements appears most appropriate. The use of the offset beam is attractive since there is no approximation required for effective breadth. With a reasonable mesh density (at least 3 elements between stiffeners) this technique should provide reasonable prediction of the overall stiffness of the structure.

---

[1] *Owen F. Hughes, "Ship Structural Design - A Rationally-Based, Computer-Aided, Optimization Approach", John Wiley & Sons, New York, 1983.*

TABLE C1.1 Stiffened Panel FEA - Results

Modelling of stiffener	Offset beams	In-plane beams	Plate elements
SET 1 : 4 x 4 Mesh	**1a**	**1e**	**1i**
Max. Vertical Deflection (mm)	9.51	5.95	4.48
Max. stress in plate (MPa)	32.87	45.20	16.11
Max. bending stress in stiffener at ends (MPa)	-379.90	-246.40	-98.31
	289.30	45.20	5.59
First three natural frequencies (Hz)	24.94	30.89	30.02
	29.12	34.00	33.93
	38.34	43.54	35.24
SET 2 : 8 x 8 Mesh	**1b**	**1f**	**1j**
Max. Vertical Deflection (mm)	7.70	6.86	6.64
Max. stress in plate (MPa)	33.87	47.69	24.12
Max. bending stress in stiffener at ends (MPa)	-339.20	-259.95	-175.58
	181.80	47.69	15.81
First three natural frequencies (Hz)	28.11	29.71	30.50
	31.89	32.40	33.93
	43.33	43.96	45.60
SET 3 : 16 x 16 Mesh	**1c**	**1g**	**1k**
Max. Vertical Deflection (mm)	6.90	6.69	6.80
Max. stress in plate (MPa)	38.96	48.22	33.15
Max. bending stress in stiffener at ends (MPa)	-307.50	-262.88	-226.17
	112.98	48.22	26.02
First three natural frequencies (Hz)	29.59	29.87	29.84
	33.31	32.60	33.51
	45.29	44.64	45.55
SET 4 : 16 x 16 Mesh (8 node)	**1d**	**1h**	**1l**
Max. Vertical Deflection (mm)	6.70	6.65	6.88
Max. stress in plate (MPa)	47.26	48.47	50.55
Max. bending stress in stiffener at ends (MPa)	-289.67	-264.25	-287.29
	75.37	48.47	41.42
First three natural frequencies (Hz)	30.02	29.94	29.58
	33.73	32.70	33.35
	45.95	44.93	45.53

FEA Example No. 1	Title : Stiffened Panel - Transverse Loading

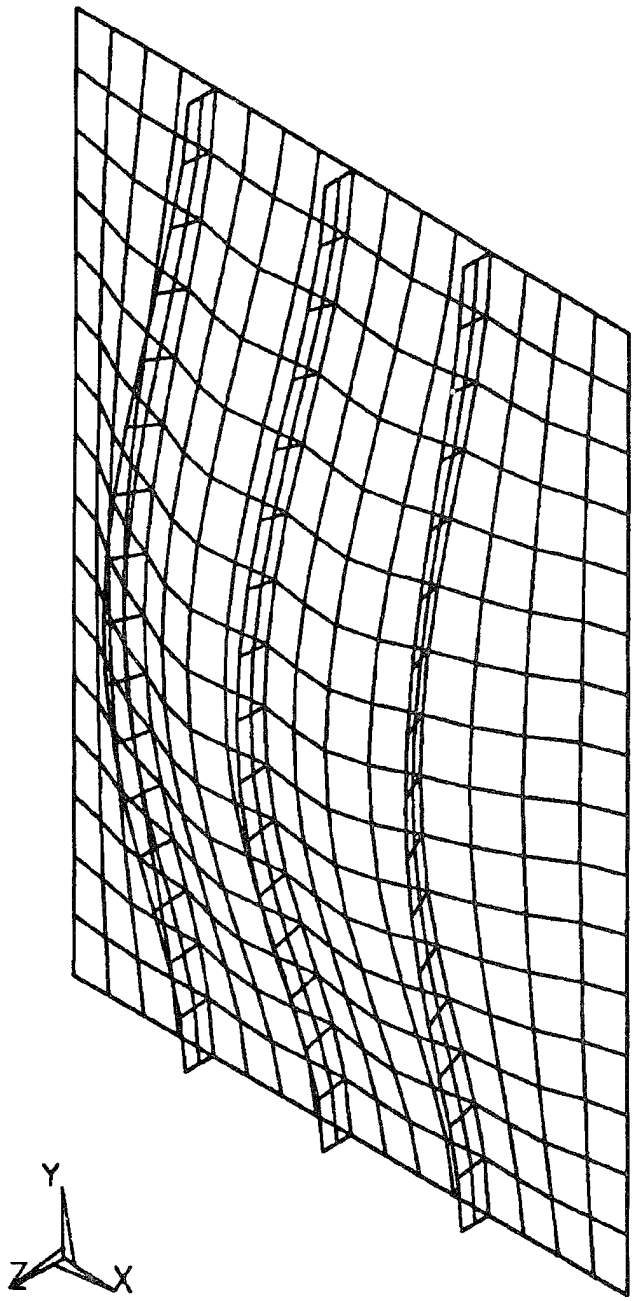

Figure C1.1 Deflected Shape

FEA Example No. 1	Title : Stiffened Panel - Transverse Loading

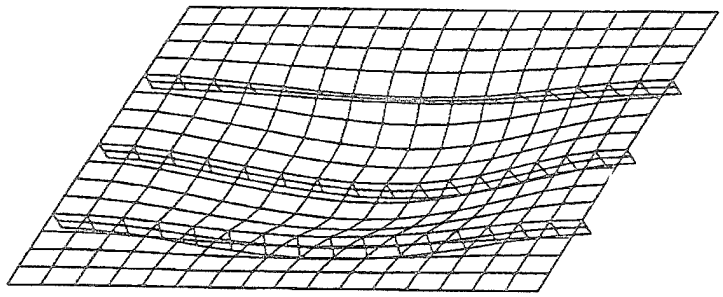

Mode 1

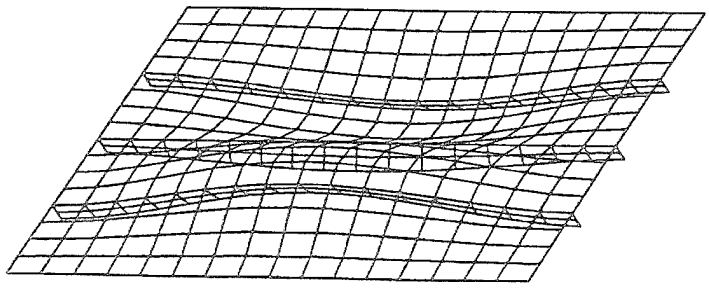

Mode 2

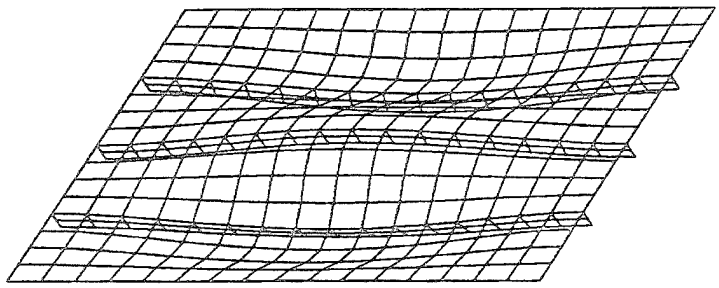

Mode 3

Figure C1.2 Mode Shapes

FEA Example No. 1	Title : Stiffened Panel - Transverse Loading

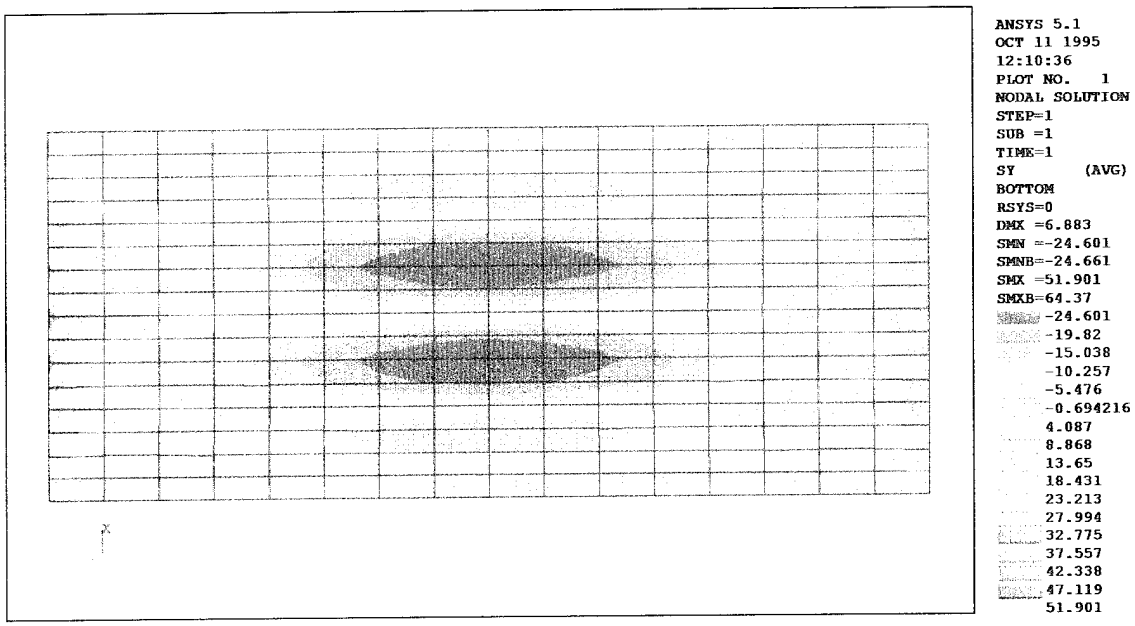

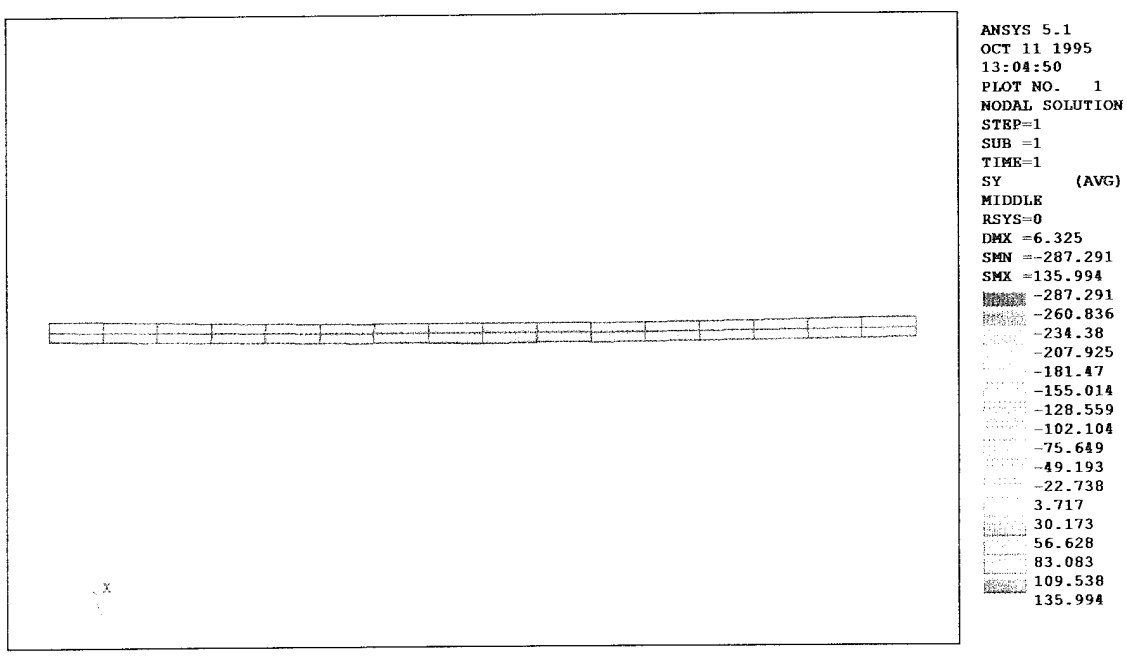

Figure C1.3 Longitudinal Stress (σ_y)

FEA Example No. 1	Title : Stiffened Panel - Transverse Loading

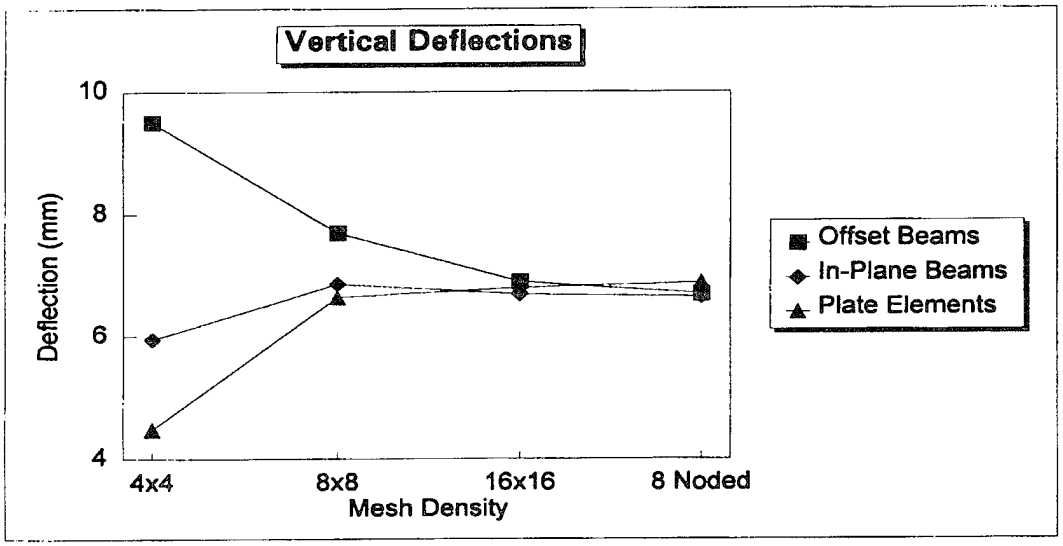

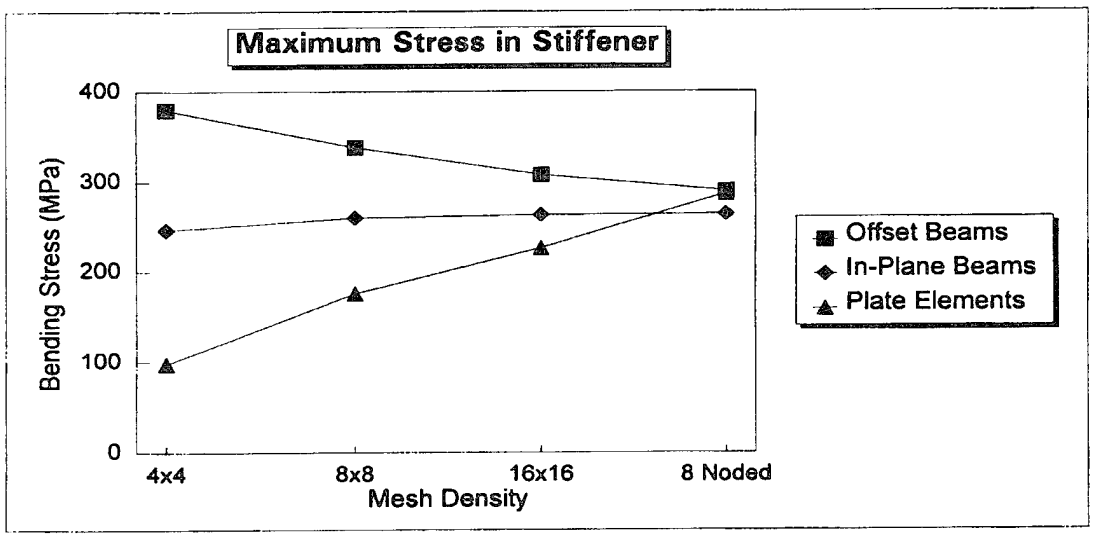

Figure C1.4 Summary of Deflection and Stress Results

FEA Example No. 1	Title : Stiffened Panel - In-Plane Loading

In-Plane Loading :

The second part to this example considers the same stiffened panel subjected to in-plane loading. The problem was modelled in two ways :

1) Using ordinary membrane elements but with orthotropic material properties; and
2) Explicit modelling of stiffeners using 4 node membrane elements as per Example 1j.

Description :

To model membrane action of stiffened plate structure advantage can be taken of the facility, available in most general purpose FEA packages, to model material orthotropy. Using an approach presented below (adapted from Hughes, see Reference on Page C-9), it is possible to simulate structural orthotropy by material orthotropy. The appropriate expressions are:

$E_x = r\,E$

$E_y = r\,E\,/\,[r - \nu^2(r-1)]$

$G_{xy} = G = E\,/\,[2(1 + \nu)]$

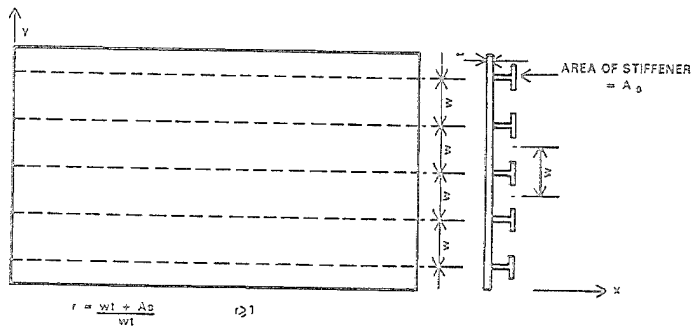

The value of "r" is defined in the figure above. With this approach the stiffened plate structure is modelled using ordinary membrane elements but with orthotropic material properties. The expressions given above assume that the stiffeners are aligned in the "x" direction. The expressions can be altered to reflect stiffener alignment in the "y" direction. Care must be taken to ensure that the local coordinate system for the element corresponds with that assumed for defining the material properties. A further assumption implicit in the approach is that the stiffeners are assumed to have identical properties and to be equally spaced.

Results :

Table C1.2 presents the results for the two cases investigated under in-plane loading. The case with orthotropic material properties predicts plate stresses and displacement reasonably accurately. It is important to bear in mind that the plate stresses obtained directly from the FEA for the orthotropic plate are incorrect. However, the actual stress can be derived from the predicted stress by factoring it by 1/r.

TABLE C1.2 Comparison of Finite Element Model Results

Description		Orthotropic material properties	Stiffeners modelled explicitely with plate elements
Stress in plate (MPa)		346.00*	350.00
Displacements	U_X	-1.50	-1.51
	U_Y	7.51	7.52
	U_Z	0.00	-0.08

* Obtained by dividing the predicted FEA stress by the factor r

C2.0 Multiple Deck Openings

A deck with multiple openings is used as an example to illustrate the influence of mesh density and the element type on deflection and stress results. The mesh density is gradually increased from coarse to fine. Two types of elements, 4-node membrane elements and and 8-node shell elements, were used. The example also illustrates the effect of varying element aspect ratio.

The results obtained from the various trials are tabulated and compared with the converged solution.

FEA Example No. 2	Title : Multiple Deck Openings

Problem Description:

A deck with multiple openings is used to illustrate the influence of mesh density, element aspect ratio, and type of element on deflection and stress results. The density of the mesh is gradually increased from coarse to fine. The use of two types of elements, four node linear and eight node quadratic shells, are illustrated. In addition, dummy line elements with very small area are used along the edge of the opening to extract maximum principle stresses. The latter may be used to overcome errors resulting from extrapolation of stresses from the shell element integration points to the nodes along the edge of the opening.

Engineering Model :

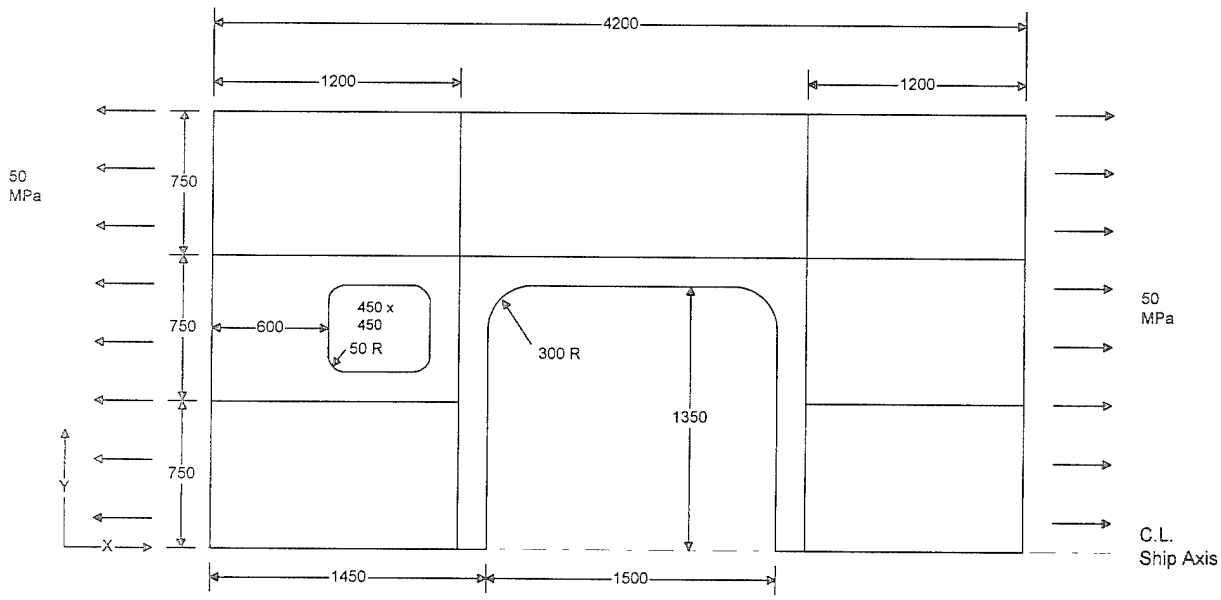

Material Properties :

E = 207x10³ MPa
v = 0.3

Geometric Properties :

Deck Plate	t = 6.35 mm
Long. Stiff.	152 x 102 Tee
Trans. Stiff.	127 x 102 Tee
Major Access Coaming	50 x 6.35 mm FB

Loading :

Uniform Tension = 50 MPa

Symmetry BC on +/- Y Boundaries

Modelling Features :

- modelling around stress concentrations
- selection of element type
- effect of varying the mesh density
- use of higher order elements
- effect of aspect ratio in the area of stress concentrations

FEA Example No. 2	Title : Multiple Deck Openings

Finite Element Models :

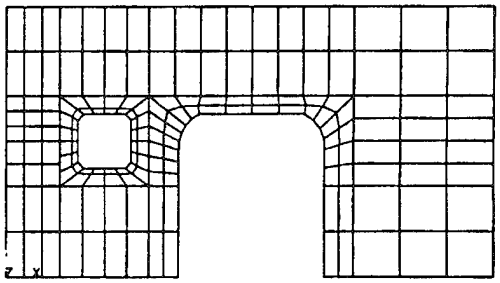

	Nodes	Elements	Degrees of freedom
2a : 4-noded membrane shell elements	214	235	642
2e : 8-noded shell elements	995	465	5970

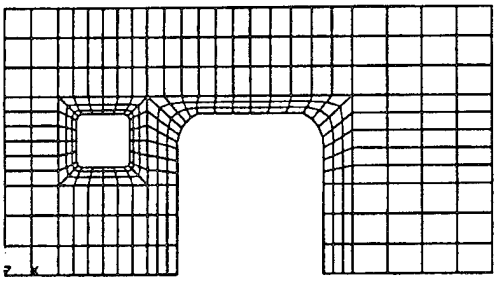

2b : 4-noded membrane shell elements	351	379	1053
2f : 8-noded shell elements	3044	1256	18264

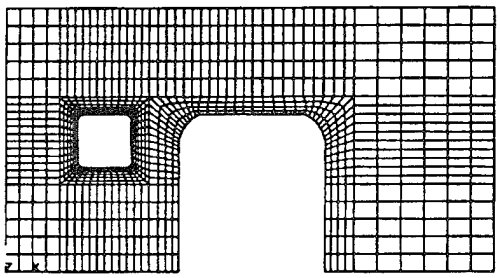

2c : 4-noded membrane shell elements	1213	1104	3639
2g : 8-noded shell elements	4842	1924	29052

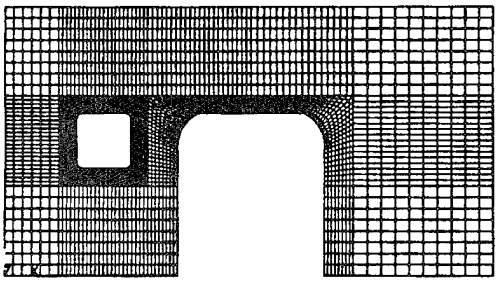

2d : 4-noded membrane shell elements	3186	3272	9558
2h : 8-noded shell elements	9368	3540	56208

FEA Example No. 2	Title : Multiple Deck Openings

DISCUSSION OF RESULTS

The analyses revealed peak stresses at the lower left corner of the smaller opening as shown in Figure C2.1 (the top figure shows stress contours for the full model and the bottom figure provides a close-up view of stress contours around the smaller opening). The stress concentration near the larger opening was relatively insignificant due to the presence of the coaming.

When the mesh density around the openings was increased, with the aspect ratio held constant, the results indicate a progressive increase in the magnitude of peak stress. The results listed in Table C2.1 indicate a converging trend in the magnitude of peak stress with mesh refinement. Although the peak stress always occurs at the same corner, it should be noted that the precise location of the peak stress varies slightly with the refinement of the mesh (number of nodes around the corner radius). Some of the differences in the results may also be due to different mesh transitioning (from areas of coarse mesh density away from the openings to areas of high mesh density at the openings) in the different models.

The results in Table C2.1 indicates the rate of convergencence of the stress results is greater for the line elements (truss or spar elements with only one degree of freedom per node placed along the edge of the openings) than it is for the plate elements. The use of line elements for obtaining stresses also overcomes stress extrapolation errors that arise in shell elements. Note that the stress results for shell elements must be extrapolated from the element integration points to the node locations at the edge of the opening.

Parametric studies were conducted to evaluate the effect of aspect ratio in predicting stress concentrations. The mesh density of Example 2d was used as the basis for this investigation. The aspect ratio of elements around the smaller opening was varied from 1.05 to 3.00. The results, Table C2.2, indicate that the best values for stress concentrations are obtained when the aspect ratio is close to one. The difference in the stress results when the aspect ratio is changed from 1.05 to 3.00 is about 8%.

FEA Example No. 2	Title : Multiple Deck Openings

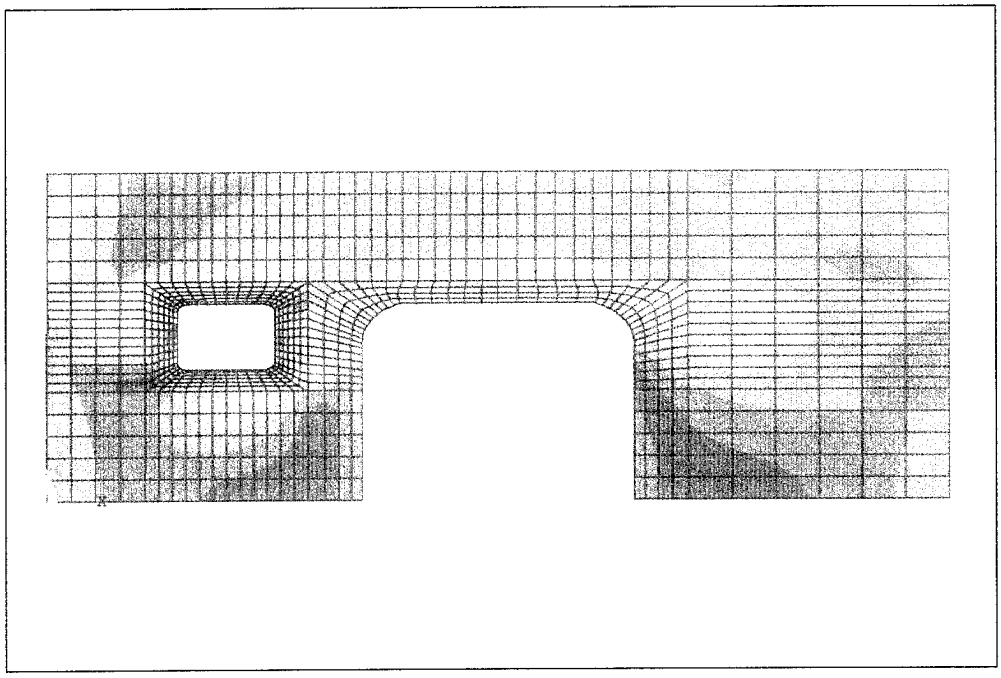

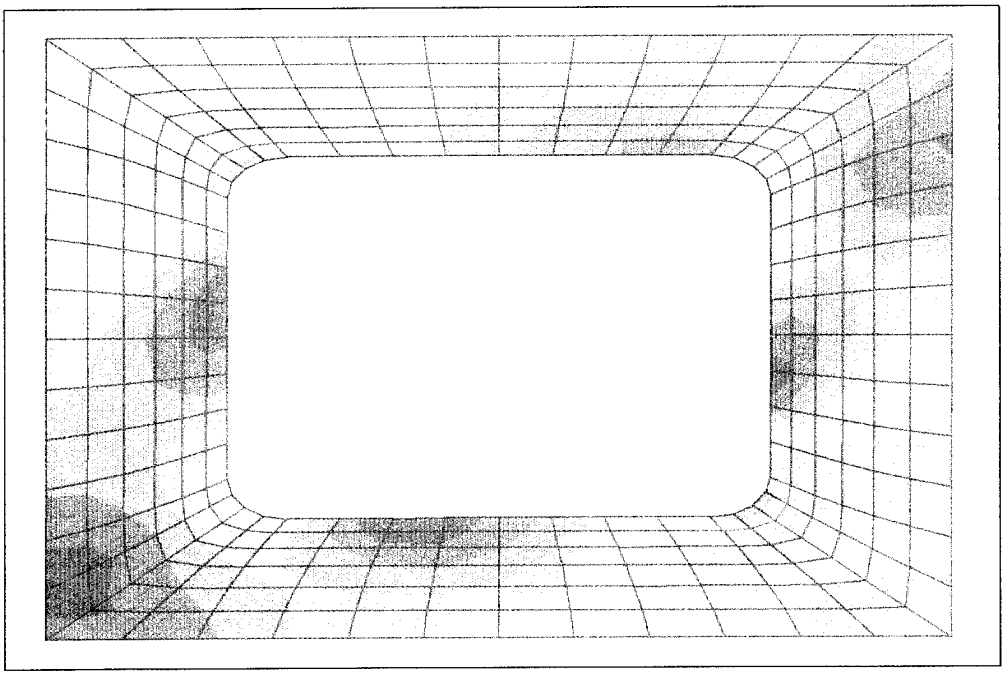

TABLE C2.1 FE Results of Mesh Density Parametric Studies

No.	Description	Aspect Ratio*	Max. Disp. (mm)	Peak Stress	
				Shell Elem. (MPa)	Line Elem. (Mpa)
2a	–four noded –one element around the radius	1.29	1.8	300	399
2b	–four noded –two elements around the radius	1.38	1.8	369	453
2c	–four noded –four elements around the radius	1.37	1.8	502	556
2d	–four noded –eight elements around the radius	1.37	1.9	572	593
2e	–eight noded –one element around the radius	1.38	1.9	543	557
2f	–eight noded –two elements around the radius	1.37	1.9	570	606
2g	–eight noded –four elements around the radius	1.36	1.9	583	607
2h	–eight noded –eight elements around the radius	1.37	1.9	591	609

* Aspect ratio of elements near stress concentration (see figure on following page)

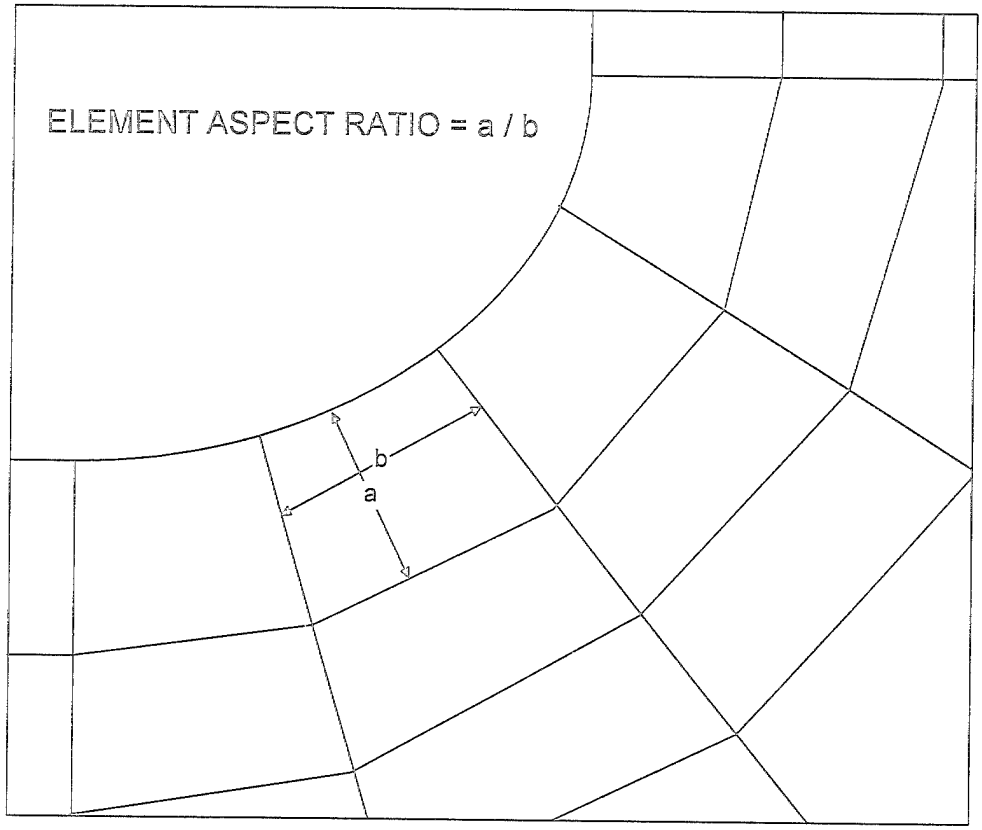

TABLE C2.2 Results from Aspect Ratio Parametric Studies

Trial No.	Aspect Ratio*	Peak Stress in Plate Elem. MPa	Relative ** Peak Stress Ratio
1	3.00	537	0.92
2	1.98	561	0.96
3	1.37	572	0.98
4	1.05	585	1.00

* Aspect ratio of elements near stress concentration

** Ratio of peak stress to that for trial No. 4 (plate element aspect ratio of 1.05, i.e. 585 MPa)

C3.0 MAST

A major factor in modelling of lattice masts is the modelling of the connection details. Depending on the type of connection, the joints can be modelled with fully rigidity at the joint, or some or all members can be modelled as pinned (hinged) joints. A simple truss-type mast structure is used to illustrate both these options. In the case of rigid jointed structure, the mesh density (i.e., the number of elements per member of the mast) was varied to investigate the influence on the results. Both static and dynamic analyses were performed on all these models.

FEA Example No. 3	Title : Mast

Problem Description:

The truss-type mast structure shown below, consisting of steel pipe sections, is to be analyzed for shock accelerations loading and to calculate frequencies and mode shapes.

Engineering Model :

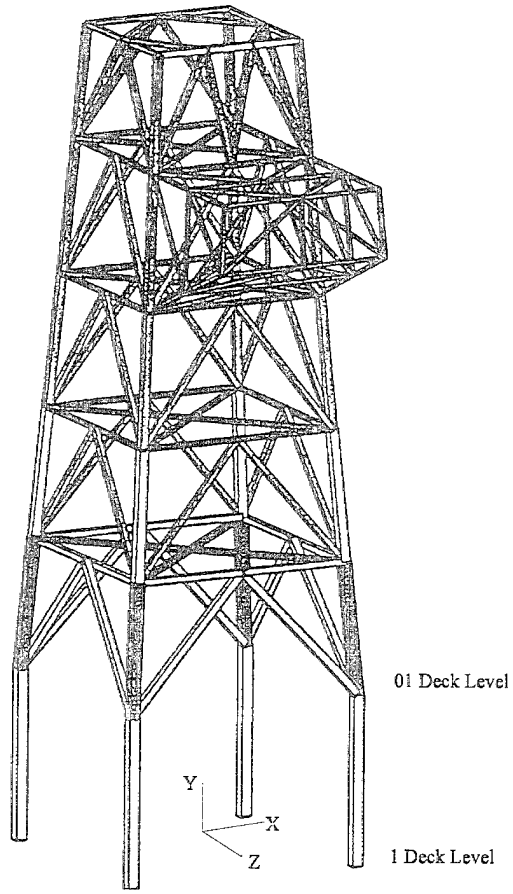

Material Properties :	Geometric Properties :	Loading :
$E = 207 \times 10^3$ MPa $\nu = 0.3$	see Table C3.1	Base Accelerations: 8 g in X 18 g in Y 8 g in Z

Modelling Features :

- pinned and rigid connections
- model refinement
- static and dynamic analyses

FEA Example No. 3	Title : Mast

Finite Element Models :

The finite element models of the mast are as shown below.

Example 3a is modelled with all joints pinned. However, if the member is continuous and has nodes between the two ends (viz. two or more elements per member) then rotations are restrained at such nodes to simulate the continuity of the member. The following is a list of members that are treated continuous:

- Main legs
- Horizontal members
- One out of the two cross braces at every level
- Principal members of the spur frame

Examples 3b and 3c are modelled with all rigid joints.

The three-dimensional beam element (BEAM44) of ANSYS is used in modelling mast members. This element has six degrees of freedom per node, and has the option of suppressing rotational degrees of freedom at nodes to simulate pinned connections. The various payloads and other dead loads were represented by mass elements (MASS21). The coordinate system used in the finite element model is as follows (also shown in the figures below):

X - Athwartship (positive in port direction)
Y - Vertical (positive upwards)
Z - Longitudinal (positive in forward direction)

The boundary conditions applied to the mast are as follows:

Main Legs:	UX = UY = UZ = 0	at 1 deck level
	UX = UZ = 0	at 01 deck level

The static analysis consisted of three load cases of base accelerations in the X, Y, and Z directions. The accelerations applied are as follows:

Case i.	8 g Athwartship Shock (m/s^2):	$a_x = 78.48$	$a_y = 9.81$	$a_z = 0$
Case ii	18 g Vertical Shock (m/s^2):	$a_x = 0$	$a_y = 186.39$	$a_z = 0$
Case iii	8 g Longitudinal Shock (m/s^2):	$a_x = 0$	$a_y = 9.81$	$a_z = 78.48$

For the dynamic load case, translational master degrees of freedom are selected at the corner nodes of each level and the first 5 natural frequencies and the corresponding mode shapes are extracted.

FEA Example No. 3	Title : Mast

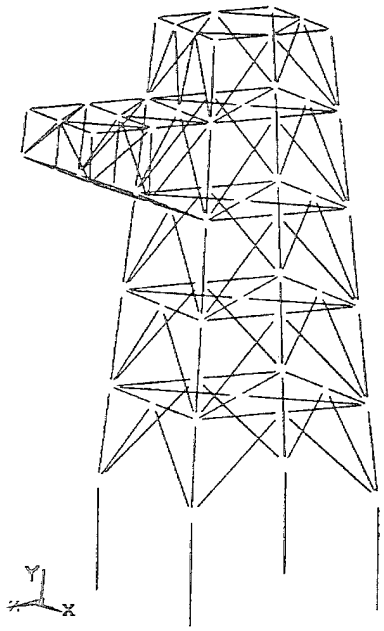

65 Nodes

217 Elements

370 Degrees of Freedom

Example 3a - Pinned Joints; Typically one element per member

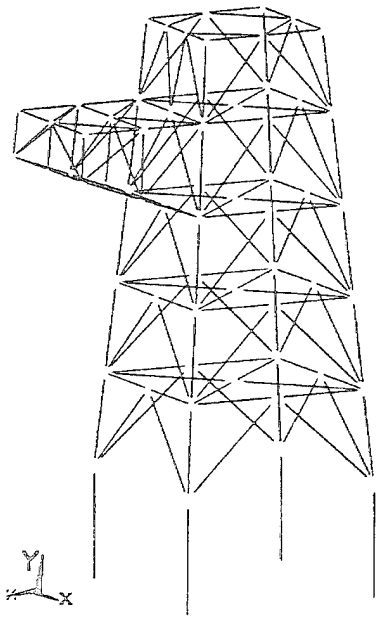

65 Nodes

217 Elements

370 Degrees of Freedom

Example 3b - Rigid Joints; Typically one element per member

FEA Example No. 3	Title : Mast

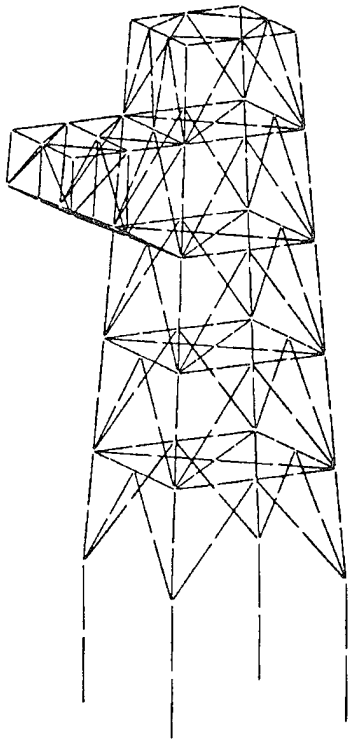

200 Nodes

352 Elements

1180 Degrees of Freedom

Example 3c - Rigid Joints; Typically two elements per member

FEA Example No. 3	Title : Mast

DISCUSSION OF RESULTS

The displacements for the three static load cases are summarized in Table C3.2. When the two modelling approaches (pinned joint versus rigid joint models) are compared, the model with pinned joints predicts the most flexible structure with the most displacements for every load case. Also, in some cases, the maximum displacement is predicted at a location different from the one predicted by the rigid joint model. In the second load case (Vertical shock) the displacement in Y direction, although at the same location for all three models, is excessively overpredicted by the pinned joint model. The maximum vertical deflections occur at the centre of the horizontal cross braces. Under vertical shock loading, these members act similar to beams subject to a unform distributed load (ie. inertial loading) for which the maximum deflection in the simply supported case (ie. pinned ends) is five times that for the fixed ends case.

Table C3.3 lists peak stresses. As expected, the axial stresses are approximately the same for the two approaches. However, the bending stresses at mid-span of horixontal members and cross braces are significantly more in the pinned joint model. This is again due to the different end conditions in the two modelling methods. The model with simply supported end conditions naturally predicts higher moments at mid-span.

Among the two models with fully rigid connections, the predicted maximum stresses are similar. The probable disadvantage with the one element per member model is that the stress at the centre of the member will not be calculated. It is possible that some members might have peak stresses at the centre as opposed to the ends if the members are also subject to local transverse loads (eg. wind loads, high inertial loads, equipment support loads).

The natural frequencies and mode shapes for the two approaches are similar (see Table C3.4). Figure C3.1 shows the first five mode shapes obtained from example 3b.

The variations in deflection and some stress results between the pin jointed and rigid jointed models are significant. Hence, extreme care and proper judgement is needed in deciding on the right modelling approach for the problem.

FEA Example No. 3	Title : Mast

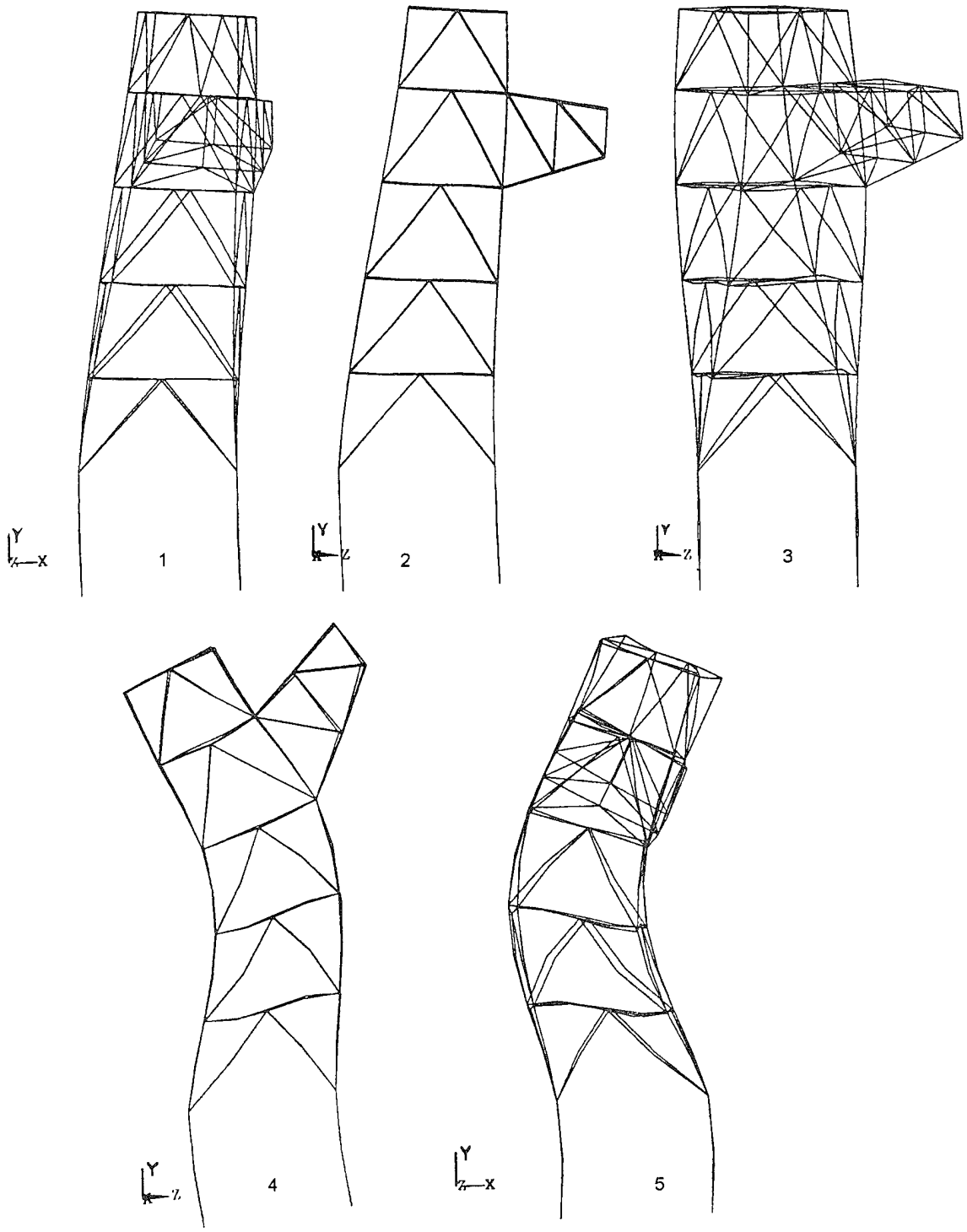

Figure C3.1 The first five mode shapes

Table C3.1: Geometry Properties

Real Constant Set No.	Member or Component Description	Cross Section or Size	Real Constants				
			Area (10^{-6} m^2)	I_{ZZ} (10^{-6} m^4)	I_{YY} (10^{-6} m^4)	TKZB1 (10^{-3} m)	TKYB1 (10^{-3} m)
1	Main Legs - 1 Deck to 02 Deck	7.25" OD x 6.0" ID	8392.0	29.9700	29.9700	92.10	92.10
2	Main Legs - 02 Deck to Level B	7.1" OD x 6.25" ID	5750.0	20.7400	20.7400	90.13	90.13
3	Main Legs - Level B to Level D	7.0" OD x 6.375" ID	4236.0	15.3100	15.3100	88.90	88.90
4	Main Legs - Level D to Level F	5.0" OD x 4.25" ID	3520.0	6.1000	6.1000	63.50	63.50
5	Main Legs - Level F to Top	4.875" OD x 4.375" ID	2344.0	4.0540	4.0540	61.91	61.91
6	"V" Braces - 02 Deck to Level D	4.875" OD x 4.5" ID	1780.0	3.1600	3.1600	61.91	61.91
7	"V" Braces - Level D to Level G	3.625" OD x 3.25" ID	1306.0	1.2490	1.2490	46.00	46.00
8	"V" Braces - Level G to Top	4.0" OD x 0.226" t	1730.0	1.9900	1.9900	50.80	50.80
9	Horizontals - Level A to Level D	4.0" OD x 3.625" ID	1450.0	1.7000	1.7000	50.80	50.80
10	Horizontals - Level E to Level G	3.0" OD x 2.635" ID	1069.0	0.6840	0.6840	38.10	38.10
11	Horizontals - Level MG	2.875" OD x 0.203" t	1100.0	0.6370	0.6370	36.51	36.51
12	Horizontals - Level MG	4.0" OD x 0.226" t	1730.0	1.9900	1.9900	50.80	50.80
13	"X" Braces - Level A to Level D	3.625" OD x 3.25" ID	1306.0	1.2490	1.2490	46.00	46.00
14	"X" Braces - Level E to Level G	3.0" OD x 2.635" ID	1069.0	0.6840	0.6840	38.10	38.10
15	"X" Braces - Level MG	2.875" OD x 0.203 t	1100.0	0.6370	0.6370	36.51	36.51
16	Platform	2.375" OD x 0.154" t	693.0	0.2771	0.2771	30.20	30.20

TABLE C3.2 Comparison of displacements for the Mast finite element analyses

Description	Max. Displacement (mm)			Location
	Example 3a –pinned joints	Example 3b –rigid joints with 1 element per member	Example 3c –rigid joints with 2 elements per member	
Athwartship (Z) shock				
δ_x	-15.13[1]	-15.07	-15.07	outer tip of spur frame
δ_y	-1.60[2]	-1.59	-1.60	outer tip of spur frame
δ_z	1.42	1.40	1.41	spur frame at main leg junction
Vertical (Y) shock				
δ_x	-3.46	-0.76	-0.76	middle of horizontal member - level 2
δ_y	-74.24	-16.59	-16.75	centre of X brace - level 2
δ_z	3.09[3]	3.07	3.08	horizontal member at mid span (top of mast)
Longitudinal (Z) shock				
δ_x	-0.37	-0.37	-0.37[4]	outer tip of spur frame
δ_y	3.94	3.93	3.94	outer tip of spur frame
δ_z	-27.74	-14.56	-14.56	spur frame at main horizontal at mid span

1 The maximum is -26.7 at the middle of horizontal member - level 2

2 The maximum is -3.91 at the centre of cross brace member - level 2

3 The maximum is -3.67 at the middle of horizontal member - level 4

4 The maximum is 0.76 at the middle of V-brace - level 2

TABLE C3.3 Comparison of stresses for the Mast finite element analyses

Description	Stress (MPa)			Location
	Example 3a –pinned joints	Example 3b –rigid joints with 1 element per member	Example 3c –rigid joints with 2 elements per member	
Athwartship (Z) shock				
Axial stress (σ_x)	±105	±104	±104	Lower V braces
Bending stress (σ_{by})	±36[1]	±39	±39	Lower V braces at main leg junction
Bending stress (σ_{bz})	±158	±61	±58	Horizontal members at mid-span
Vertical (Y) shock				
Axial stress (σ_x)	-81, +41	-81, +40	-81, +40	Main legs, spur frame diagonals
Bending stress (σ_{by})	±245[2]	±163	±163	X braces at main leg junction
Bending stress (σ_{bz})	±34[3]	±41	±41	Spur frame at main leg junction
Longitudinal (Z) shock				
Axial stress (σ_x)	±88	±88	±87	Lower V braces
Bending stress (σ_{by})	±17[4]	±31	±31	Spur frame at main leg junction
Bending stress (σ_{bz})	±193	±60	±58	Horizontal members at mid-span

1 Main Legs at level 1

2 Cross Braces at mid-span

3 Main Legs at mid-span

4 Main Legs at mid-span

TABLE C3.4 Comparison of frequencies for the Mast finite element analyses

Mode	Frequency (Hz)			Mode Shape
	Example 3a –pinned joints	Example 3b –rigid joints with 1 element per member	Example 3c –rigid joints with 2 elements per member	
1	13.30	13.31	13.30	Bending about Z- axis (1st mode)
2	13.76	13.77	13.76	Bending about X-axis (1st mode)
3	21.56	21.53	21.53	Twisting about Y-axis
4	34.51	34.39	34.41	Bending about X-axis (2nd mode)
5	38.33	38.13	38.16	Bending about Z- axis (2nd mode)

Appendix D

Ship Structure Benchmarks for Assessing FEA Software

Benchmark	Title	Page
BM-1-a	Opening With Insert Plate (4-Node Plate Elements)	D-2
BM-1-b	Opening With Insert Plate (8-Node Plate Elements)	D-7
BM-2-a	Stiffened Panel (In-Plane Beam Elements with 4-Node Plate Elements)	D-9
BM-2-b	Stiffened Panel (Off-Set Beam Elements with 4-Node Plate Elements)	D-15
BM-2-c	Stiffened Panel (4-Node Plate Elements)	D-17
BM-2-d	Stiffened Panel (8-Node Plate Elements)	D-19
BM-3	Vibration Isolation System	D-21
BM-4	Mast Structure	D-24
BM-5	Bracket Detail	D-29

WARNING

The benchmark problems and associated FEA models presented in this document are intended for the express purpose of evaluating FEA software for ship structural analysis applications. While attempts have been made to ensure that the FEA models follow good modelling practice, they should not necessarily be regarded as appropriate for any other purpose than that for which they are intended.

Benchmark No. :	BM-1-a	**Benchmark Title :**	Opening with Insert Plate
Analysis Type :	2D Static	**Element Type(s) :**	4-Node Plane Stress 2-Node Line (Axial Stress)

Problem Description:

A rectangular deck opening with rounded corners is reinforced with insert plates at each corner. Determine the maximum von Mises stress in the 20 mm insert plate and the 10 mm deck plate.

Sketch of Benchmark Problem :

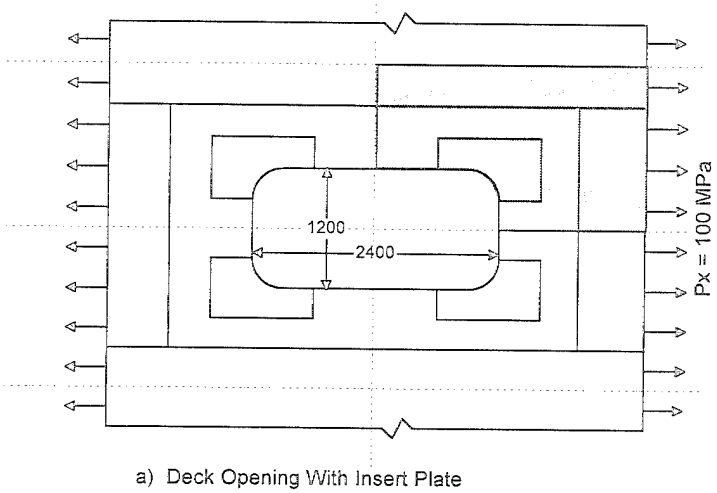

a) Deck Opening With Insert Plate

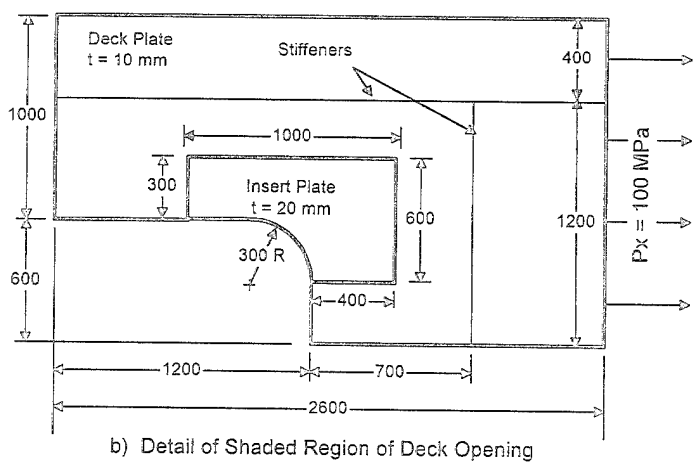

b) Detail of Shaded Region of Deck Opening

Material Properties :	Geometric Properties :	Loading :
$E = 207000\ N/mm^2$ $\nu = 0.3$	Deck Plate $t = 10$ mm Insert Plate $t = 20$ mm Stiffeners $A = 1575\ mm^2$ Line Elements $A = 1\ mm^2$	$P_x = 100\ N/mm^2$ (Applied as nodal force loading)

Benchmark No. : BM-1-a	Benchmark Title : Opening with Insert Plate

Analysis Assumptions :

Due to symmetry, only one-quarter of the opening is modeled. The deck stiffeners are modelled using axial stress line elements since only in-plane loading is considered.

Finite Element Model :

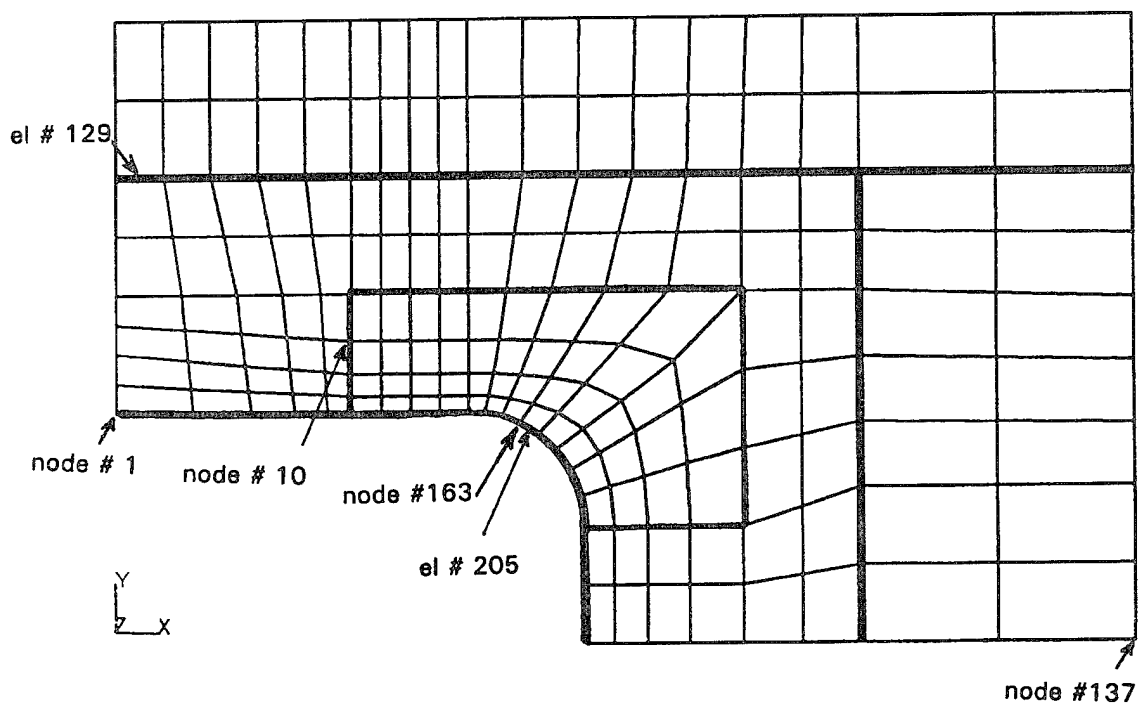

No. of Nodes : 200

No. of Elements : 212

1.	Deck Plate	120	4-Node Plate Elements $t = 10$ mm
2.	Insert Plate	48	4-Node Plate Elements $t = 20$ mm
3.	Stiffeners	25	2-Node Line Elements $A = 1575$ mm^2
4.	Line Elements	19	2-Node Line Elements $A = 1$ mm^2 (for stresses at free edge)

Boundary Conditions :

$U_x = 0$ at $X = 0$
$U_y = 0$ at $Y = 0$ and $Y = 1600$
$U_z = 0$ at $(X = 0; Y = 0)$, $(X = 0; Y = 1600)$, $(X = 2600; Y = 0)$, and $(X = 2600, Y = 1600)$

Benchmark No. : BM-1-a	Benchmark Title : Opening with Insert Plate			
Finite Element Software Results	**ANSYS 5.1**	**MSC / NASTRAN Windows 1**	**ALGOR 3.14**	**Converged Solution [4] (ANSYS 5.1)**
FEA Software Element Types :	SHELL63 LINK8	CQUAD4 CROD	TYPE 6 TYPE 1	SHELL93 LINK8
Maximum Stresses (MPa)				
1. Deck Plate σ_{eqv} [1] (node # 10)	192.8	193.5	192.3	196.9
2. Insert Plate σ_{eqv} [1] (node #163)	198.3	189.2	199.3	206.3
3. Stiffeners σ_a [2] (el # 129)	139.8	139.8	139.8	140.3
4. Edge Elements σ_a [3] (el # 205)	204.4	203.3	204.4	209.0
Maximum Deflections (mm)				
Ux (node #137)	1.496	1.496	1.496	1.506
Uy (node # 1)	0.157	0.157	0.157	0.157

Comments on Benchmark Results :

1. σ_{eqv} is the maximum von Mises or equivalent stress reported for the plate elements (section properties 1 and 2). The values presented are the nodal averaged stresses within each group of elements of the same section property. The nodal averaged stresses are obtained by extrapolating stresses at the element integration points to the node locations, and then averaging the values at each node. Different FEA software may use different extrapolation and averaging methods which can lead to slight differences in the nodal stress results.

2. σ_a is the maximum axial or direct stress in the line elements.

3. The benchmark FE model includes line elements of small arbitrary area (section property 4 with $A = 1\ mm^2$) which are used to obtain stresses around the free edge of the opening. The maximum axial stress reported in the line elements corresponds approximately to the maximum principal and von Mises stress at the edge of the opening, irrespective of the stress extrapolation method used for the plate elements.

4. The "converged solution" for this benchmark was obtained using a more refined model of the same problem consisting of 8 node shell elements with ANSYS 5.1. The stress contour plot for the converged solution is shown on the following page. Note that the plot shows element stresses, not nodal averaged stresses, so as to permit presentation of the results for the two plate thicknesses on the same plot. Although the plot shows slight discontinuities in the stress contours, these are mainly away from the areas of interest. The difference between the maximum element stresses and the nodal averaged stresses is minimal at the two locations reported in the above table. There is a real stress discontinuity at the border between the insert plate and the deck plate due to the abrupt change in plate thickness. The stress contour values are in units of MPa. The "MX" on the plot signifies the location of maximum stress.

Benchmark No. :	BM-1-a	Benchmark Title :	Opening with Insert Plate

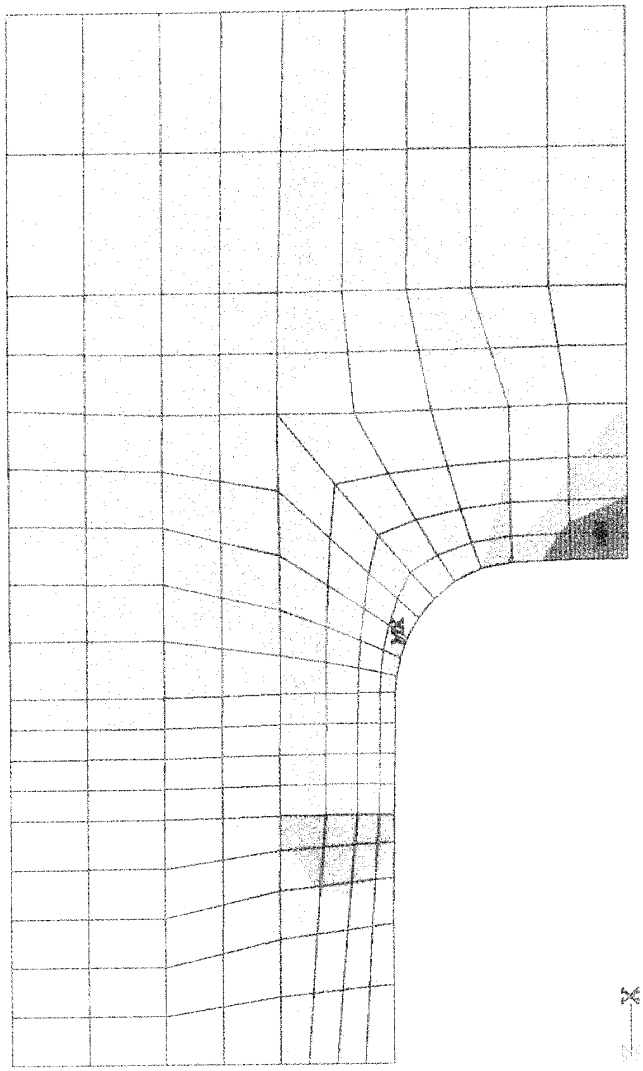

Benchmark 1-ref : Opening With Insert Plate, Reference Solution Model

Benchmark No. :	BM-1-b	**Benchmark Title :**	Opening with Insert Plate
Analysis Type :	2D Static	**Element Type(s) :**	8-Node Plane Stress 2-Node Line (Axial Stress)

Problem Description:

Repeat Benchmark 1-a using a coarser mesh with 8-node elements in place of 4-node elements.

Finite Element Model :

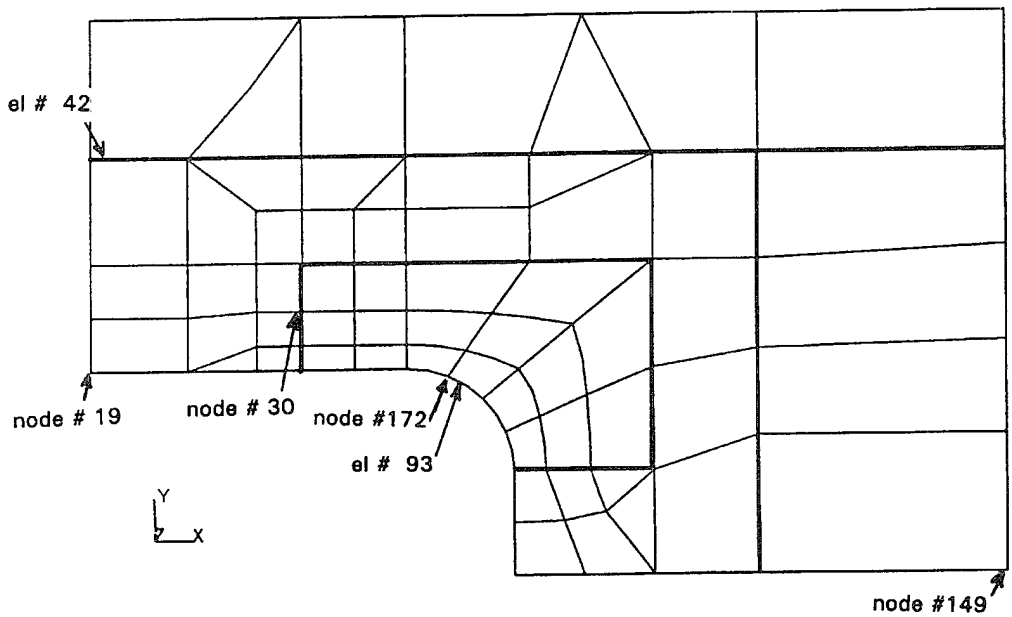

No. of Nodes : 200

No. of Elements : 103

1. Deck Plate	41	8-Node Plate Elements	$t = 10$ mm
2. Insert Plate	18	8-Node Plate Elements	$t = 20$ mm
3. Stiffeners	22	2-Node Line Elements	$A = 1575$ mm^2
4. Line Elements	22	2-Node Line Elements	$A = 1$ mm^2 (for stresses at free edge)

Boundary Conditions :

As defined for BM- 1-a.

Loading :

As defined for Benchmark 1-a.

Benchmark No. : BM-1-b	Benchmark Title : Opening with Insert Plate			
Finite Element Software Results	ANSYS 5.1	MSC / NASTRAN Windows 1	ALGOR	Converged Solution[4] (ANSYS 5.1)
FEA Software Element Types :	SHELL93 LINK8	CQUAD8 CROD	NA*	SHELL93 LINK8
Maximum Stresses (MPa)				
1. Deck Plate σ_{eqv} [1] (node # 30)	195.6	195.6	-	196.9
2. Insert Plate σ_{eqv} [1] (node #172)	207.8	204.5	-	206.3
3. Stiffeners σ_a [2] (el # 42)	140.3	140.3	-	140.3
4. Edge Elements σ_a [3] (el # 93)	207.8	207.8	-	209.0
Maximum Deflections (mm)				
Ux (node #149)	1.505	1.505	-	1.506
Uy (node # 19)	0.157	0.157	-	0.157

Comments on Benchmark Results :

*ALGOR does not include 8-node plate elements for stress analysis.

1. σ_{eqv} is the maximum von Mises or equivalent stress reported for the plate elements (section properties 1 and 2). The values presented are the nodal averaged stresses within each group of elements of the same section property. The nodal averaged stresses are obtained by extrapolating stresses at the element integration points to the node locations, and then averaging the values at each node. Different FEA software may use different extrapolation and averaging methods which can lead to slight differences in the nodal stress results.

2. σ_a is the maximum axial or direct stress in the line elements.

3. The benchmark FE model includes line elements of small arbitrary area (section property 4 with A = 1 mm^2) which are used to obtain stresses around the free edge of the opening. The maximum axial stress reported in the line elements corresponds approximately to the maximum principal and von Mises stress at the edge of the opening, irrespective of the stress extrapolation method used for the plate elements.

4. The "converged solution" for this benchmark was obtained using a more refined model of the same problem consisting of 8 node shell elements with ANSYS 5.1. The stress contour plot for the converged solution is shown on Page D-5. Refer to the BM-1-a results for further discussion of the converged solution.

Benchmark No. :	BM-2-a	**Benchmark Title :**	Stiffened Panel
Analysis Type :	3D Static 3D Modal	**Element Type(s) :**	4-Node Shell 2-Node Beam (In plane of plate)

Problem Description:

A rectangular stiffened panel is subject to a uniform pressure load applied to its surface. Determine the maximum deflection, stresses and natural frequencies for the panel.

Sketch of Benchmark Problem :

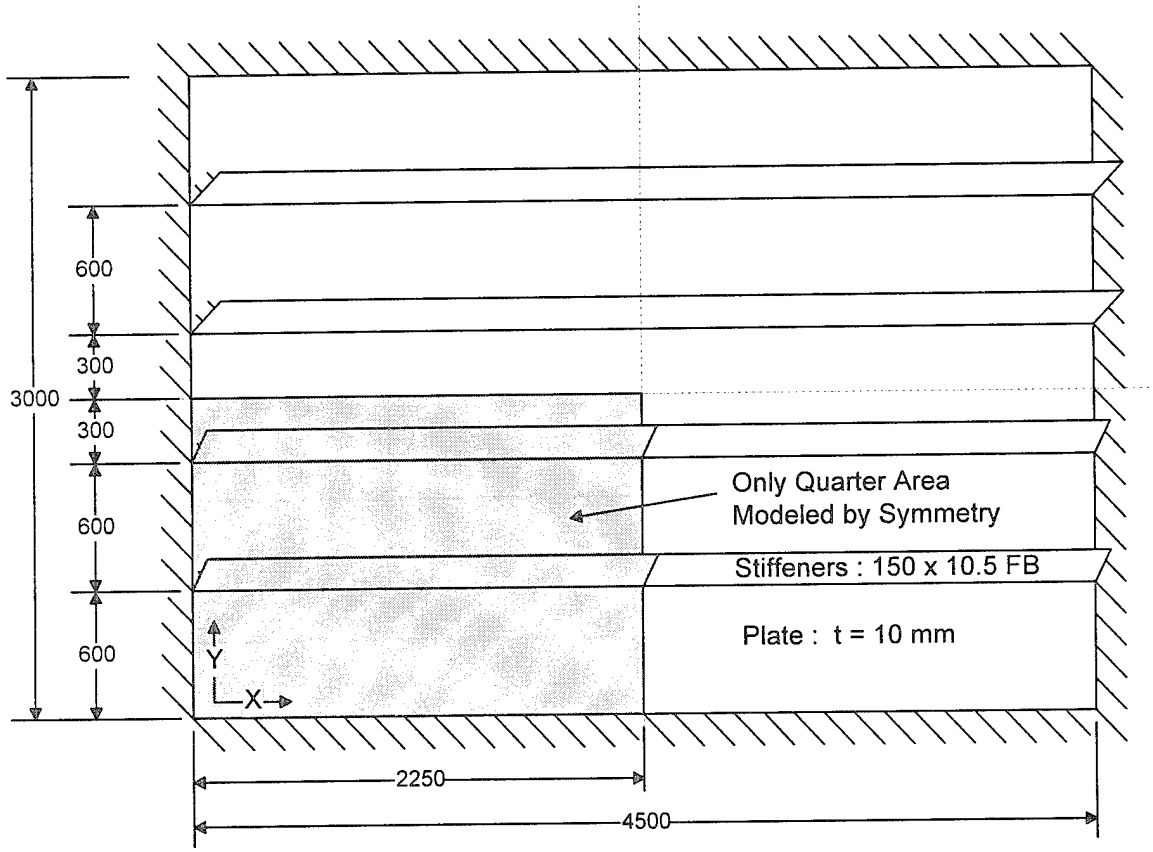

Benchmark Problem 2 : Stiffened Panel

Material Properties :	**Geometric Properties :**	**Loading :**
$E = 207 \times 10^9$ N/m^2 $\nu = 0.3$ $\rho = 7850$ kg/m^3	Plate t = 10 mm Stiffeners 150 x 10.5 FB	$P_z = 9810$ Pa

Benchmark No. : BM-2-a	Benchmark Title : Stiffened Panel

Finite Element Model :

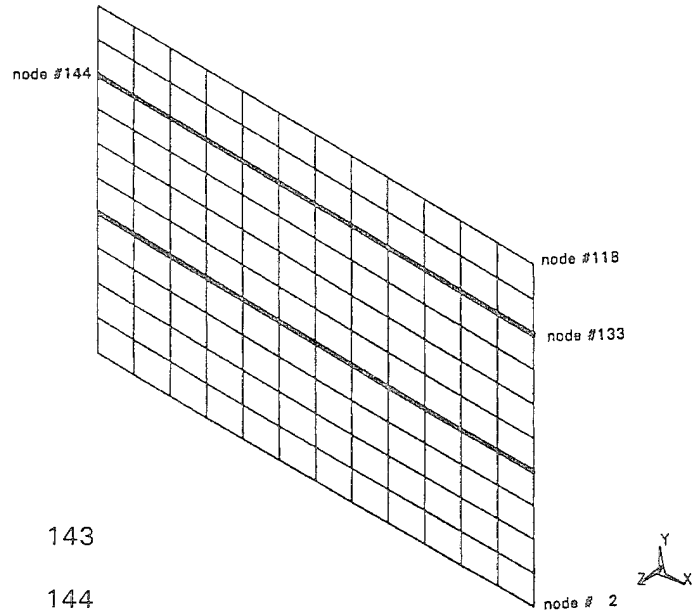

No. of Nodes : 143

No. of Elements : 144

1. Panel 120 4-Node 3-D Plate Elements t = 10 mm

2. Stiffeners 24 2-Node 3-D Beam Elements

$A = 0.001575\ m^2$ $Y_t = 0.1352\ m$
$I_{zz} = 53.35 \times 10^{-6}\ m^4$ ** $Y_b = 0.0148\ m$
$I_{yy} = 10.19 \times 10^{-6}\ m^4$ $Z_t = 0.00525\ m$
$I_{xx} = 0.0553 \times 10^{-6}\ m^4$ (Torsion) $Z_b = 0.00525\ m$

** In-Plane Beam elements I_{zz} includes 40 t effective plate width.

Boundary Conditions :

1. Static Analysis
   - All nodes fixed at edges along x=0 and along y=0.
   - Symmetry about YZ plane along edge at x = 2.250 m
   - Symmetry about XZ plane along edge y = 1.500 m

2. Modal Analysis*
   - All nodes fixed at edges along x=0 and along y=0.
   - Symmetry about YZ plane along edge at x = 2.250 m
   - Antisymmetry about XZ plane along edge y = 1.500 m

* This benchmark test only requires calculation of the first four natural frequencies for symmetry / antisymmetry boundary conditions. In order to capture all modes of vibration, the modal analysis of the quarter model would also have to consider symmetry / symmetry, antisymmetry / symmetry, and antisymmetry / antisymmetry boundary conditions.

Benchmark No. :	BM-2-a		Benchmark Title :	Stiffened Plate	
Finite Element Software Results		**ANSYS 5.1**	**MSC / NASTRAN Windows 1**	**ALGOR 3.14**	**Converged Solution [1] (ANSYS 5.1)**
Element Types :	Plate Stiffeners	SHELL63 BEAM4	CQUAD4 CBAR	TYPE 6 TYPE 2	SHELL93 SHELL93
Maximum Stresses 1. Plate σ_{eqv} [2]	(MPa) (node # 2)	39.3	38.2	36.5	42.1
2. Stiffeners σ_x [3]	(MPa)				
Tension	(node #133)	69.0	69.0	69.0	61.3
Compression	(node #144)	-135.8	-135.8	-135.0	-126.5
Maximum Deflections Uz [4]	(mm) (node #118)	3.30	3.29	3.29	3.50
Natural Frequencies [5] :					
1st Mode	(Hz)	36.5	36.5	36.6	35.9
2nd Mode	(Hz)	60.9	61.1	61.2	61.0
3rd Mode	(Hz)	100.1	100.4	102.4	96.5
4th Mode	(Hz)	110.2	111.4	111.9	106.5

1. The "converged solution" results were obtained using a refined mesh model with 8-node shell elements on ANSYS 5.1. The von Mises Stress contours for the converged model are shown on Page D-13. The stress contours are in units of Pa (N/m^2).

2. The maximum stress in the plate occurs at the middle of the long fixed edges (node 2). Reported are the maximum nodal averaged von Mises stress of the top or bottom surface of the plate elements. Note that different FEA programs may use different conventions for defining the top and bottom surfaces of plate elements. Also, different FEA programs use different extrapolation and averaging techniques for computing plate / shell element stresses which may lead to slight differences (refer to BM-1-a for discussion).

3. Reported are the maximum stresses in the beam elements (axial stress + bending stress). The maximum tensile stress occurs at the centre of the middle stiffeners (node 133). The maximum compressive stress occurs at the fixed ends of the middle stiffeners (node 144).

4. The maximum out-of-plane deflection (Uz) occurs at the centre of the panel (node 118). Differences in deflection and stress results relative to the converged model are due mainly to the simplifying assumption of 40 t effective plate width used in defining the beam properties.

5. The frequencies and mode shapes for symmetry / antisymmetry boundary conditions from the converged model are shown on Page D-12. The mode shapes predicted by the BM-2-a FEA models are the same as those for the converged model. The frequencies predicted by the BM-2-a model deviate slightly from those predicted by the converged model, particularily for the 3rd and 4th modes. These are more complex modes involving torsion of the stiffeners for which the beam + plate element model is probably too simplified. However, the plate + beam model gives very good predictions for the first two modes.

Benchmark No. : BM-2-a	Benchmark Title : Stiffened Plate

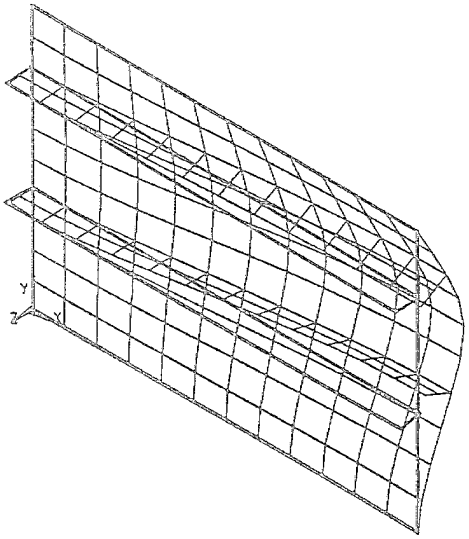

1st Mode : 35.9 Hz

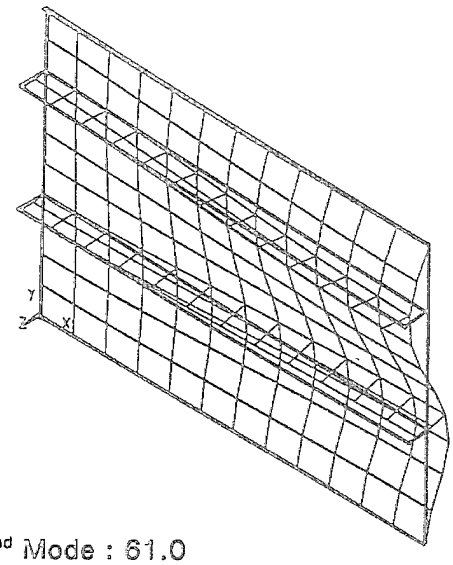

2nd Mode : 61.0

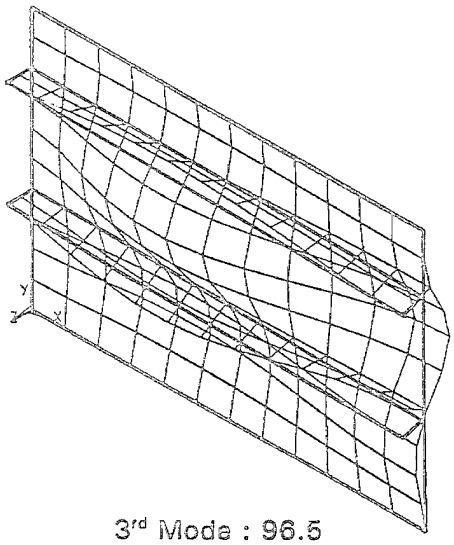

3rd Mode : 96.5

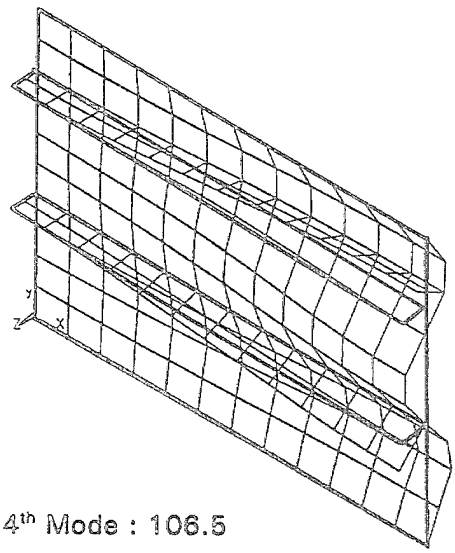

4th Mode : 106.5

Modal Analysis Results of Converged Model for BM-2 (ANSYS 5.1)

Benchmark No. :	BM-2-a	Benchmark Title :	Stiffened Plate

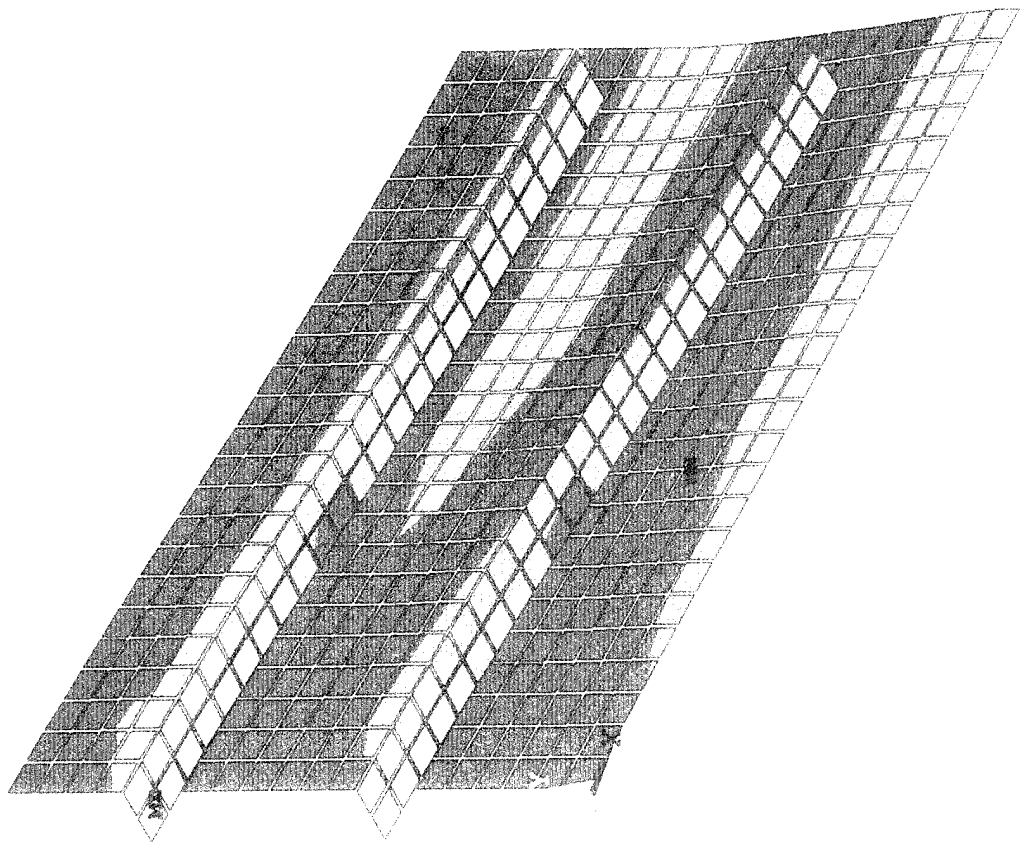

Benchmark 2 - Reference Solution

Benchmark No. :	BM-2-b	**Benchmark Title :**	Stiffened Panel
Analysis Type :	3D Static 3D Modal	**Element Type(s) :**	4-Node Shell 2-Node Offset Beam

Problem Description:

Repeat BM-2-a using 2-node offset beams in place of in-plane beam elements.

Finite Element Model :

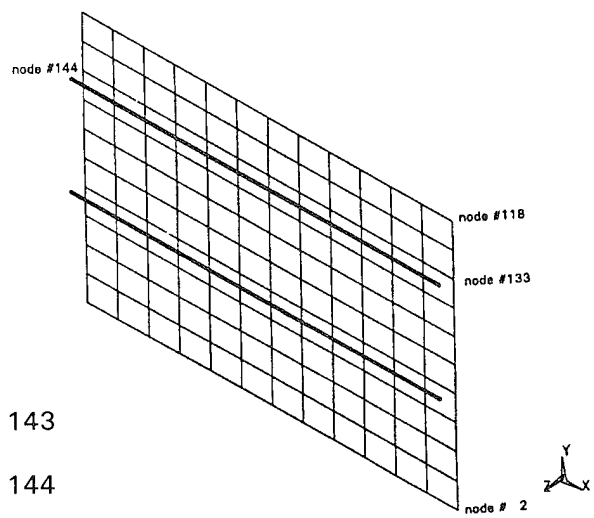

No. of Nodes : 143

No. of Elements : 144

1. Panel 120 4-Node 3-D Plate Elements $t = 0.010$ m

2. Stiffeners 24 2-Node 3-D Beam Elements**

$A = 0.001575\ m^2$ $Y_t = 0.075$ m
$I_{zz} = 0.0145 \times 10^{-6}\ m^4$ $Y_b = 0.075$ m
$I_{yy} = 2.95 \times 10^{-6}\ m^4$ $Z_t = 0.00525$ m
$I_{xx} = 0.0553 \times 10^{-6}\ m^4$ (Torsion) $Z_b = 0.00525$ m

** Beam element centroid off-set 0.075 m in global Z direction.

Boundary Conditions :

1. Static Analysis
   - All nodes fixed at edges along $x=0$ and along $y=0$.
   - Symmetry about YZ plane along edge at $x = 2.250$ m
   - Symmetry about XZ plane along edge $y = 1.500$ m

2. Modal Analysis*
   - All nodes fixed at edges along $x=0$ and along $y=0$.
   - Symmetry about YZ plane along edge at $x = 2.250$ m
   - Antisymmetry about XZ plane along edge $y = 1.500$ m

* This benchmark test only requires calculation of the first four natural frequencies for symmetry / antisymmetry boundary conditions.

Benchmark No. : BM-2-b				Benchmark Title : Stiffened Plate	
Finite Element Software Results		ANSYS 5.1	MSC / NASTRAN Windows 1	ALGOR 3.14	Converged Solution [1] (ANSYS 5.1)
Element Types :	Plate Stiffeners	SHELL63 BEAM44	CQUAD4 CBEAM	TYPE 6 TYPE 2	SHELL93 SHELL93
Maximum Stresses	(MPa)				
1. Plate σ_{eqv} [2]	(node # 2)	42.1	38.2	34.4	42.1
2. Stiffeners σ_x [3]	(MPa)				
Tension	(node #133)	70.3	70.4	70.3	61.3
Compression	(node #144)	-153.7	-154.0	-153.7	-126.5
Maximum Deflections	(mm)				
Uz [4]	(node #118)	3.42	3.41	3.41	3.50
Natural Frequencies [5] :					
1st Mode	(Hz)	36.3	36.3	36.5	35.9
2nd Mode	(Hz)	61.1	61.2	61.7	61.0
3rd Mode	(Hz)	97.0	95.7	101.9	96.5
4th Mode	(Hz)	107.0	106.8	111.9	106.5

1. The "converged solution" results were obtained using a refined mesh model with 8-node shell elements on ANSYS 5.1. The von Mises Stress contours for the converged model are shown on Page D-13.

2. The maximum stress in the plate occurs at the middle of the long fixed edges (node 2). Reported are the maximum nodal averaged von Mises stress of the top or bottom surface of the plate elements. Note that different FEA programs may use different conventions for defining the top and bottom surfaces of plate elements. Also, different FEA programs use different extrapolation and averaging techniques for computing plate / shell element stresses which may lead to slight discrepancies (refer to BM-1-a for discussion).

3. Reported are the maximum stresses in the beam elements (axial stress + bending stress). The maximum tensile stress occurs at the centre of the middle stiffeners (node 133). The maximum compressive stress occurs at the fixed ends of the middle stiffeners (node 144). The off-set beam element introduces an artificial moment into the problem which results in over prediction of the stresses and under prediction of deflections. This effect also influences stress results for the plate elements. Refer to Example 1, Appendix C for further discussion of this effect.

4. The maximum out-of-plane deflection (Uz) occurs at the centre of the panel (node 118).

5. The frequencies and mode shapes for symmetry / antisymmetry boundary conditions from the converged model are shown on Page D-12. The mode shapes predicted by the BM-2-b FEA models are the same as those for the converged model.

Benchmark No. :	BM-2-c	Benchmark Title :	Stiffened Panel
Analysis Type :	3D Static 3D Modal	Element Type(s) :	4-Node Plate

Problem Description:

Repeat BM-2-a using 4-node plate elements to model the stiffeners and plate explicitly.

Finite Element Model :

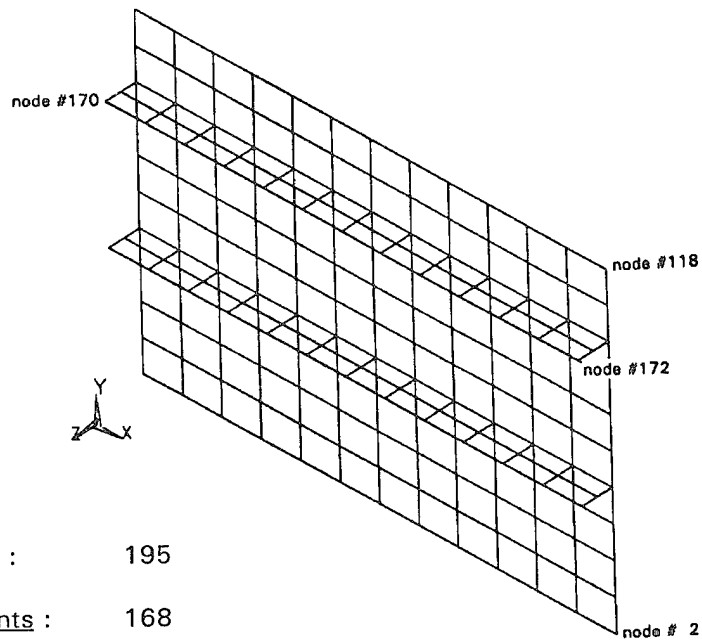

No. of Nodes : 195

No. of Elements : 168

Panel	120	4-Node 3-D Plate Elements	t = 10 mm
Stiffeners	48	4-Node 3-D Plate Elements	t = 10.5 mm

Boundary Conditions :

1. Static Analysis
   - All nodes fixed at edges along x=0 and along y=0.
   - Symmetry about YZ plane along edge at x = 2.250 m
   - Symmetry about XZ plane along edge y = 1.500 m

2. Modal Analysis*
   - All nodes fixed at edges along x=0 and along y=0.
   - Symmetry about YZ plane along edge at x = 2.250 m
   - Antisymmetry about XZ plane along edge y = 1.500 m

* This benchmark test only requires calculation of the first four natural frequencies for symmetry / antisymmetry boundary conditions.

Benchmark No. : BM-2-c			Benchmark Title : Stiffened Plate		
Finite Element Software Results		ANSYS 5.1	MSC / NASTRAN Windows 1	ALGOR 3.14	Converged Solution [1] (ANSYS 5.1)
Element Types :	Plate Stiffeners	SHELL63 SHELL63	CQUAD4 CQUAD4	TYPE 6 TYPE 6	SHELL93 SHELL93
Maximum Stresses	(MPa)				
1. Plate σ_{eqv} [2]	(node # 2)	42.3	41.3	39.3	42.1
2. Stiffeners σ_x [3]	(MPa)				
Tension	(node #172)	68.9	69.0	68.2	61.3
Compression	(node #170)	-126.0	-126.0	-124.0	-126.5
Maximum Deflections	(mm)				
Uz [4]	(node #118)	3.47	3.43	3.42	3.50
Natural Frequencies [5] :					
1st Mode	(Hz)	36.1	36.2	36.1	35.9
2nd Mode	(Hz)	60.8	61.1	61.2	61.0
3rd Mode	(Hz)	95.0	94.9	97.4	96.5
4th Mode	(Hz)	104.9	105.8	106.3	106.5

1. The "converged solution" results were obtained using a refined mesh model with 8-node shell elements on ANSYS 5.1. The von Mises Stress contours for the converged model are shown on Page D-13.

2. The maximum stress in the plate occurs at the middle of the long fixed edges (node 2). Reported are the maximum nodal averaged von Mises stress of the top or bottom surface of the plate elements. Note that different FEA programs may use different conventions for defining the top and bottom surfaces of plate elements. Also, different FEA programs use different extrapolation and averaging techniques for computing plate / shell element stresses which may lead to slight discrepancies (refer to BM-1-a for discussion).

3. Reported are the maximum nodal averaged stresses, σ_x, in the stiffener plate elements (maximum of top or bottom surface stress). The maximum tensile stress occurs at the centre of the middle stiffeners (node 172). The maximum compressive stress occurs at the fixed ends of the middle stiffeners (node 170).

4. The maximum out-of-plane deflection (Uz) occurs at the centre of the panel (node 118).

5. The frequencies and mode shapes for symmetry / antisymmetry boundary conditions from the converged model are shown on Page D-12. The frequencies and mode shapes predicted by the BM-2-c FEA models are very similar to those from the converged model.

Benchmark No. :	BM-2-d	**Benchmark Title :**	Stiffened Panel
Analysis Type :	3D Static 3D Modal	**Element Type(s) :**	8-Node Plate

Problem Description:

Repeat BM-2-a using 8-node plate elements to model the stiffeners and plate explicitly.

Finite Element Model :

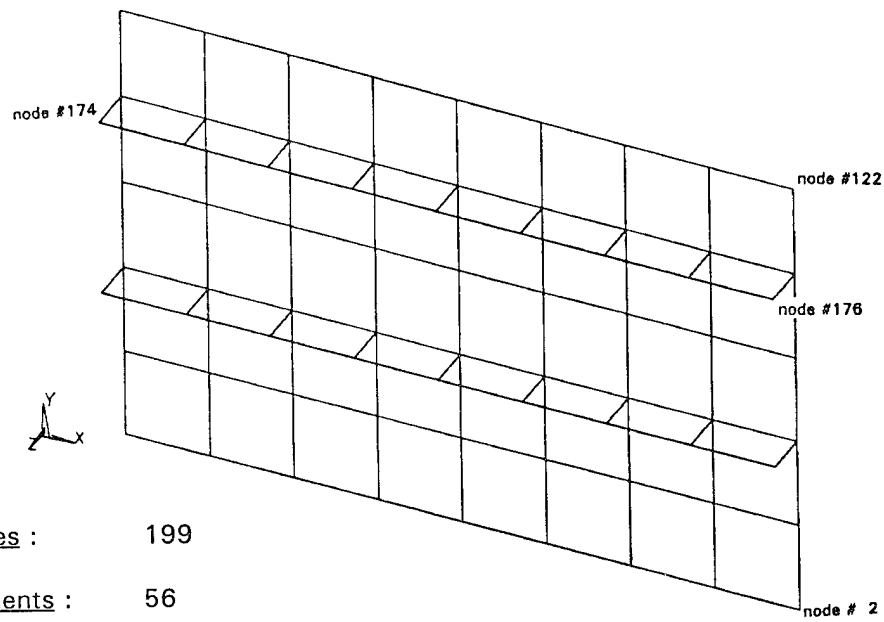

No. of Nodes : 199

No. of Elements : 56

Panel	40	8-Node 3-D Plate Elements	t = 10 mm
Stiffeners	16	8-Node 3-D Plate Elements	t = 10.5 mm

Boundary Conditions :

1. Static Analysis
   - All nodes fixed at edges along x=0 and along y=0.
   - Symmetry about YZ plane along edge at x = 2.250 m
   - Symmetry about XZ plane along edge y = 1.500 m

2. Modal Analysis*
   - All nodes fixed at edges along x=0 and along y=0.
   - Symmetry about YZ plane along edge at x = 2.250 m
   - Antisymmetry about XZ plane along edge y = 1.500 m

* This benchmark test only requires calculation of the first four natural frequencies for symmetry / antisymmetry boundary conditions.

Benchmark No. :	BM-2-d		Benchmark Title :	Stiffened Plate	
Finite Element Software Results		ANSYS 5.1	MSC / NASTRAN Windows 1	ALGOR	Converged Solution [1] (ANSYS 5.1)
Element Types :	Plate Stiffeners	SHELL93 SHELL93	CQUAD8 CQUAD8	NA*	SHELL93 SHELL93
Maximum Stresses	(MPa)				
1. Plate σ_{eqv} [2]	(node # 2)	41.7	41.7	-	42.1
2. Stiffeners σ_x [3]	(MPa)				
Tension	(node #176)	69.9	69.9	-	61.3
Compression	(node #174)	-143.0	-143.0	-	-126.5
Maximum Deflections	(mm)				
Uz [4]	(node #122)	3.49	3.49	-	3.50
Natural Frequencies [5] :					
1st Mode	(Hz)	36.0	36.0	-	35.9
2nd Mode	(Hz)	61.0	61.0	-	61.0
3rd Mode	(Hz)	96.6	96.1	-	96.5
4th Mode	(Hz)	105.9	105.6	-	106.5

*ALGOR does not include 8-node plate elements for stress analysis.

1. The "converged solution" results were obtained using a refined mesh model with 8-node shell elements on ANSYS 5.1. The von Mises Stress contours for the converged model are shown on Page D-13.

2. The maximum stress in the plate occurs at the middle of the long fixed edges (node 2). Reported are the maximum nodal averaged von Mises stress of the top or bottom surface of the plate elements. Note that different FEA programs may use different conventions for defining the top and bottom surfaces of plate elements. Also, different FEA programs use different extrapolation and averaging techniques for computing plate / shell element stresses which may lead to slight discrepancies (refer to BM-1-a for discussion).

3. Reported are the maximum nodal averaged stresses, σ_x, in the stiffener plate elements (maximum of top or bottom surface stress). The maximum tensile stress occurs at the centre of the middle stiffeners (node 176). The maximum compressive stress occurs at the fixed ends of the middle stiffeners (node 174).

4. The maximum out-of-plane deflection (Uz) occurs at the centre of the panel (node 122).

5. The frequencies and mode shapes for symmetry / antisymmetry boundary conditions from the converged model are shown on Page D-12. The frequencies and mode shapes predicted by the BM-2-d FEA models are very similar to those from the converged model, despite the relative coarseness of the mesh of the former.

Benchmark No. :	BM-3	**Benchmark Title :**	Machinery Vibration Isolation System
Analysis Type :	3D Modal	**Element Type(s) :**	3D Beams 1 DOF Springs (in X, Y, Z directions) Mass (with Rotational Inertia)

Problem Description:

Determine the natural frequencies for this generator vibration isolation system.

Sketch of Benchmark Problem :

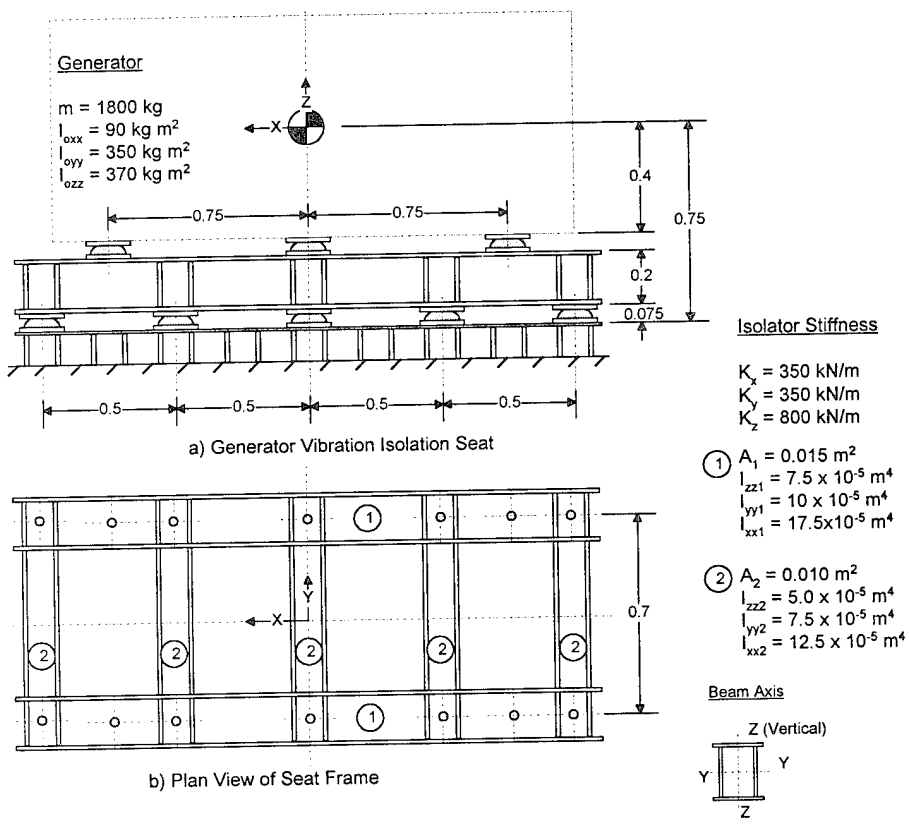

a) Generator Vibration Isolation Seat

b) Plan View of Seat Frame

Material Properties :		**Geometric Properties :**	**Loading :**
1. Steel	E = 207x10³ MPa v = 0.3 ρ = 7850 kg/m³	Refer to above sketch. Generator modelled as rigid link elements and point mass at centroid.	Not Applicable.
2. "Rigid" Links	E = 207x10⁴MPa v = 0.3 ρ = 0 kg/m³		

Benchmark No. : BM-3	Benchmark Title : Machinery Vibration Isolation System

Finite Element Model :

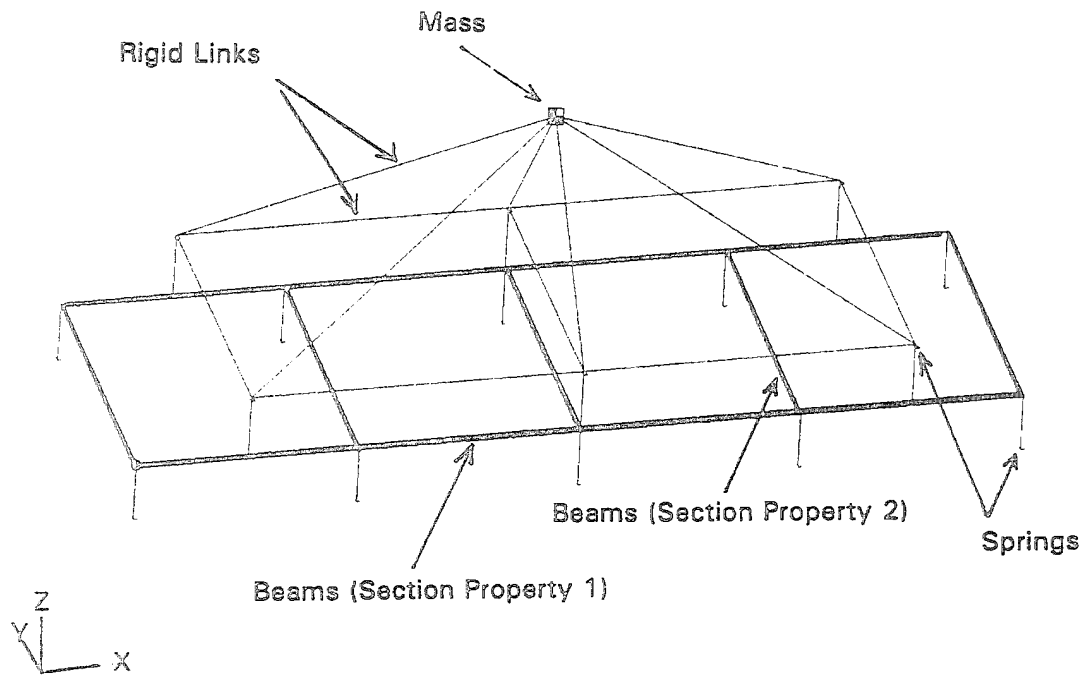

No. of Nodes : 81

No. of Elements : 90

14	Beams (Section Property 1)
5	Beams (Section Property 2)
14	Springs (X-Direction)
14	Springs (Y-Direction)
14	Springs (Z-Direction)
1	Mass
51	Rigid Links

Boundary Conditions :

Isolator springs fixed at deck seating level.

Benchmark No. : BM-3	Benchmark Title : Machinery Vibration Isolation System		
Finite Element Software Results	**ANSYS 5.1**	**MSC / NASTRAN Windows 1**	**ALGOR 3.14**
FEA Software Element Types :	BEAM4 MASS21 COMBIN14	CBAR CONM2 CROD	TYPE 2 - TYPE 1 & 7
Total Mass and C of G Location :			
Total Mass (kg)	2545.7	2545.7	2545.7
C of G X (m)	1.0000	1.0000	1.0000
Y (m)	0.3500	0.3500	0.3500
Z (m)	0.4066	0.4066	0.4065
Modes and Frequencies (Hz)			
1 Translation in Y direction (1st)	2.85	2.85	2.80
2 Translation in X direction (1st)	3.60	3.60	3.66
3 Translation in Z direction (1st)	6.30	6.30	6.30
4 Rotation about Z axis (1st)	6.62	6.62	6.98
5 Rotation about Y axis (1st)	9.61	9.61	10.04
6 Rotation about X axis (1st)	11.12	11.12	11.45
7 Translation in X direction (2nd)	14.76	14.76	14.89
8 Rotation about Z axis (2nd)	15.28	15.28	16.61
9 Translation in Y direction (2nd)	16.92	16.92	16.79
10 Translation in Z direction (2nd)	21.51	21.51	21.51
11 Rotation about Y axis (2nd)	22.86	22.86	23.60
12 Rotation about X axis (2nd)	23.12	23.12	24.44

Comments on Benchmark Results :

Modes 1 to 6 involve vibration modes with the generator and raft masses moving in phase, while the two masses are out-of phase for modes 7 to 12.

Benchmark No. :	BM-4	**Benchmark Title :**	Mast Structure
Analysis Type :	3D Static 3D Modal	**Element Type(s) :**	3D Beam 3D Spar Mass

Problem Description:

Determine the stresses, displacements, natural frequencies and modes under the specified loading conditions for the mast structure shown in the sketch below.

Sketch of Benchmark Problem :

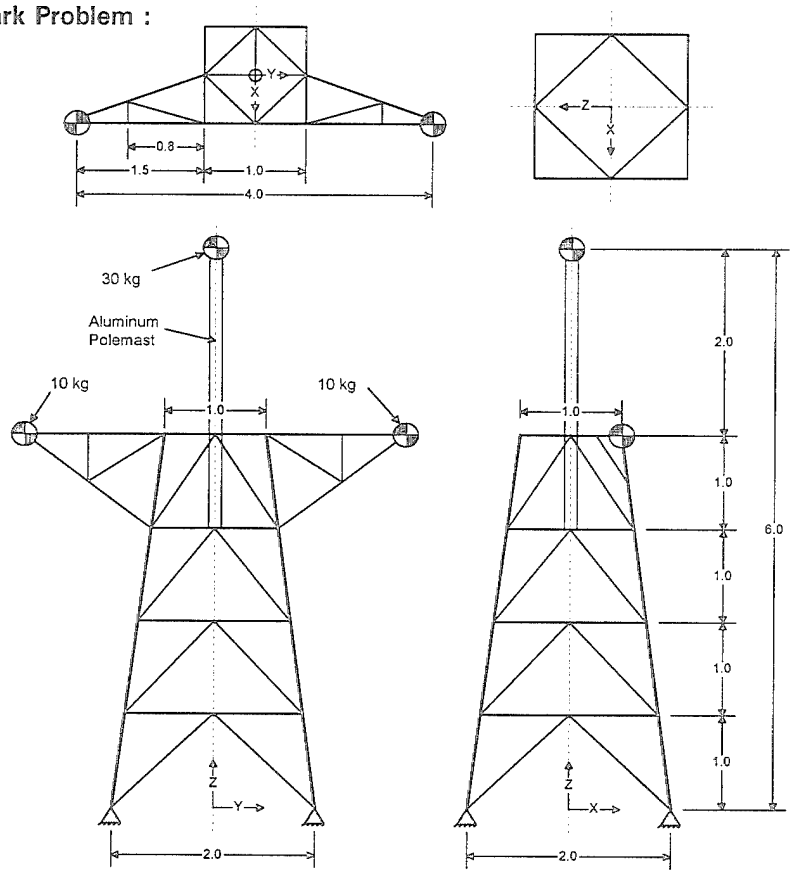

Material Properties :	**Geometric Properties :**	**Loading :**
1. Steel $E = 207 \times 10^9 N/m^2$ $\nu = 0.3$ $\rho = 7850\ kg / m^3$ 2. Aluminum (pole mast) $E = 70 \times 10^9\ N/m^2$ $\nu = 0.3$ $\rho = 2900\ kg / m^3$	Refer to table of section properties.	Accelerations $a_x = 5\ m/s^2$ $a_y = 5\ m/s^2$ $a_z = 15\ m/s^2$ Nodal Forces $F_x = 3000\ N$ (Applied on all nodes)

Benchmark No. : BM-4	Benchmark Title : Mast Structure

Member Section Properties

Section No.	Description	O. Dia. (m)	Area ($x10^{-3}$ m^2)	Izz & Iyy ($x10^{-6}$ m^4	Ixx ($x10^{-6}$ m^4)	Element Type	No. Elems
1	Main Legs	0.12700	3.520	6.100	12.2	Beam	32
2	Pole Mast Support	0.09200	1.306	1.249	2.50	Beam	8
3	Vertical Braces 0.09200	1.306				Spar	32
4	Main Horizontals	0.07620	1.069	0.684	1.37	Beam	32
5	Pole Mast (Aluminum)	0.24130	4.887	33.70	67.4	Beam	5
8	Horizontal Braces	0.07302	1.100			Spar	16
9	Platform Braces	0.06040	0.693			Spar	10
10	Platform Chords	0.06040	0.693	0.2771	0.554	Beam	12

Finite Element Model :

The main legs, polemast, main horizontals and platform frame chords are modelled as continuous beams (ie. with full continuity), while the various brace members are modelled as spars with pinned ends.

No. of Nodes : 67

No. of Elements : 150

Boundary Conditions : UX, UY, & UZ translations of node at base of each leg restrained.

Static Analysis Loads : Nodal force of 3000 N in X direction (Fx) at every node.
Accelerations $a_x = 5\ m/s^2$, $a_y = 5\ m/s^2$, $a_z = 15\ m/s^2$.

Benchmark No. : BM-4	Benchmark Title : Mast Structure

Plot of Finite Element Model Showing Critical Element Numbers :

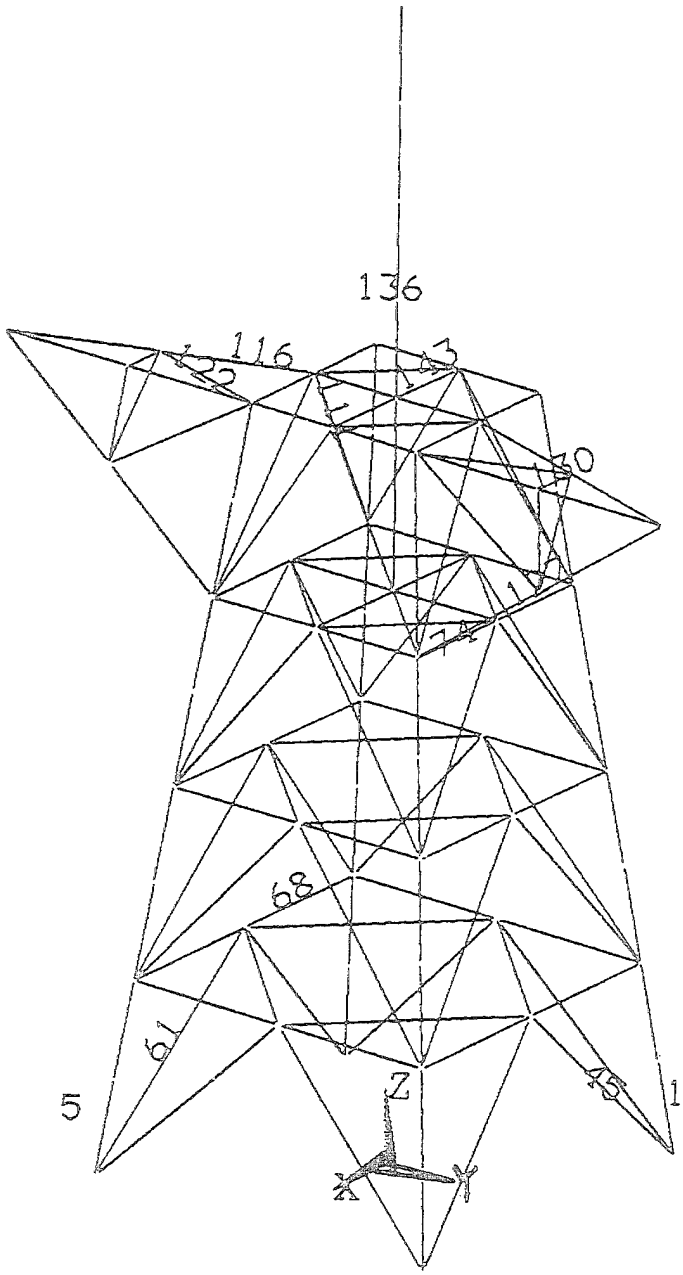

Benchmark No. : BM-4				Benchmark Title : Mast Structure		
Finite Element Software Results				**ANSYS 5.1**	**MSC / NASTRAN Windows 1**	**ALGOR 3.14**
FEA Software Element Types :				BEAM4 LINK8 MASS21	CBAR CROD CONM2	TYPE 2 TYPE 1
Total Mass :	(kg)	m		1415.8	1415.8	1418.7
Centre of Gravity:	(m)	X Y Z		0.0336 0.0003 2.3797	0.0336 0.0003 2.3797	0.0335 0.0003 2.3841
Max. Deflections [1] :	(mm)	U_X U_Y U_Z	(node #63) (node #63) (node #56)	12.00 -0.36 -0.62	12.00 -0.37 -0.62	12.65 -0.41 -0.65
Total Reaction Forces :	(N)	F_X F_Y F_Z		-190920 7079 21236	-190921 7079 21237	NA*
Stresses (MPa) [2] :						
1. Main Legs	Max. Tensile Max. Compressive		(el #1) (el #5)	33.70 -36.09	33.67 -36.11	33.72 -31.35
2. Pole Mast Support	Max. Tensile Max. Compressive		(el #143) (el #142)	99.42 -108.96	99.41 -108.95	95.85 -97.76
3. Vertical Braces	Max. Tensile Max. Compressive		(el #45) (el #61)	34.94 -35.54	34.94 -35.54	38.15 -37.78
4. Main Horizontals	Max. Tensile Max. Compressive		(el #74) (el #68)	48.41 -38.11	48.40 -38.09	47.81 -39.61
5. Pole Mast	Max. Tensile Max. Compressive		(el #136) (el #136)	53.53 -53.88	53.54 -53.86	49.98 -50.01
8. Horizontal Braces	Max. Tensile Max. Compressive		(el #111) (el #109)	10.77 -4.32	10.77 -4.32	10.97 -4.29
9. Platform Braces	Max. Tensile Max. Compressive		(el #130) (el #122)	4.60 -15.64	4.61 -15.64	4.73 -16.40
10. Platform Chords	Max. Tensile Max. Compressive		(el #116) (el #127)	71.90 -73.43	71.92 -73.41	75.97 -74.85

Benchmark No. : BM-4	Benchmark Title : Mast Structure		
Finite Element Software Results	**ANSYS 5.1**	**MSC / NASTRAN Windows 1**	**ALGOR 3.14**
Modes and Frequencies : [3] (Hz)			
1 Pole Mast Cantilever Bending	20.75	20.76	20.72
2 Pole Mast Cantilever Bending	20.79	20.80	20.76
3 Local Bending of Main Horizontals	41.13	41.13	41.13
4 Platforms Bending in X Direction	47.46	47.46	47.45

Comments on Benchmark Results :

1. The maximum deflections in the X and Y directions occur at the top of the polemast. The maximum vertical deflection occurs at the starboard spur frame.

2. The stresses listed are the maximum combined (axial + bending) stress in the beam elements. Note that the maximum combined stresses are calculated assuming that the beam element section is rectangular, although the members in this particular problem are actually of circular cross section. This is a limitation of most FEA programs, although some programs may allow calculation of element stresses assuming a circular cross section. The simplified assumption of a square or rectangular cross section is conservative.

3. The first two vibration modes involve cantilever bending of the polemast in the X and Y directions (they are in fact identical modes due to the symmetry of the polemast). The third mode involves local bending of the main horizontal members of the mast. The fourth mode involves bending of the two platforms at the top of the mast in the X direction.

4. The ALGOR program requires a separate module to output reaction forces which is not included with the basic solution module and, as such, reaction results were not available. In addition, the ALGOR program does not include mass elements for linear static analysis. Instead, the inertia loads due to the payload masses were modelled by applying nodal forces at the appropriate locations. The difference in modelling approach and the inability to confirm the total applied loads may explain, in part, the differences in the ALGOR results compared to those obtained by ANSYS and NASTRAN.

Benchmark No. :	BM-5	**Benchmark Title :**	Bracket Detail
Analysis Type :	3D Static	**Element Type(s) :**	4-Node Thick Shell (With Transverse Shear)

Problem Description:

Determine the maximum stress for the VLCC Top Bracket detail shown in the sketch below.

Sketch of Benchmark Problem :

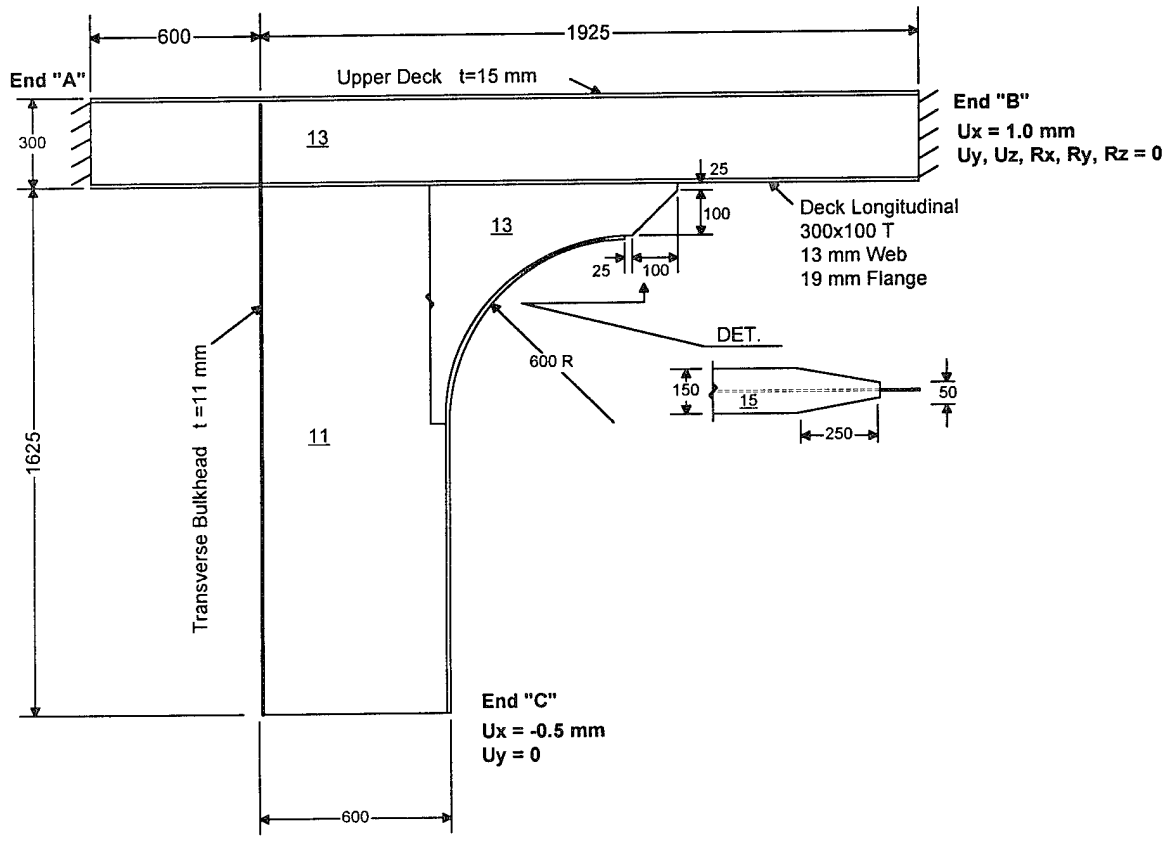

Material Properties : E = 207x10^3 MPa v = 0.3	**Geometric Properties :** As defined in above sketch.	**Loading :** Applied displacement constraints.

Benchmark No. : BM-5	Benchmark Title : Bracket Detail

Finite Element Model :

Thick shell / plate elements with transverse shear flexibility are used to model the bracket, deck longitudinal, and the web of the bulkhead stiffener. The transverse bulkhead, and upper deck are modelled using line elements of 40 t^2 section area (9000 mm^2 for deck, 4850 mm^2 for bulkhead). The flange of the bulkhead stiffener is modelled with line elements using the 2250 mm^2 area of the flange. The areas of the flange line elements taper down to 923 mm^2 at the end of the bracket. Line elements of a small arbitrary area (0.01 mm^2) are included at the toe of the bracket for obtaining stresses.

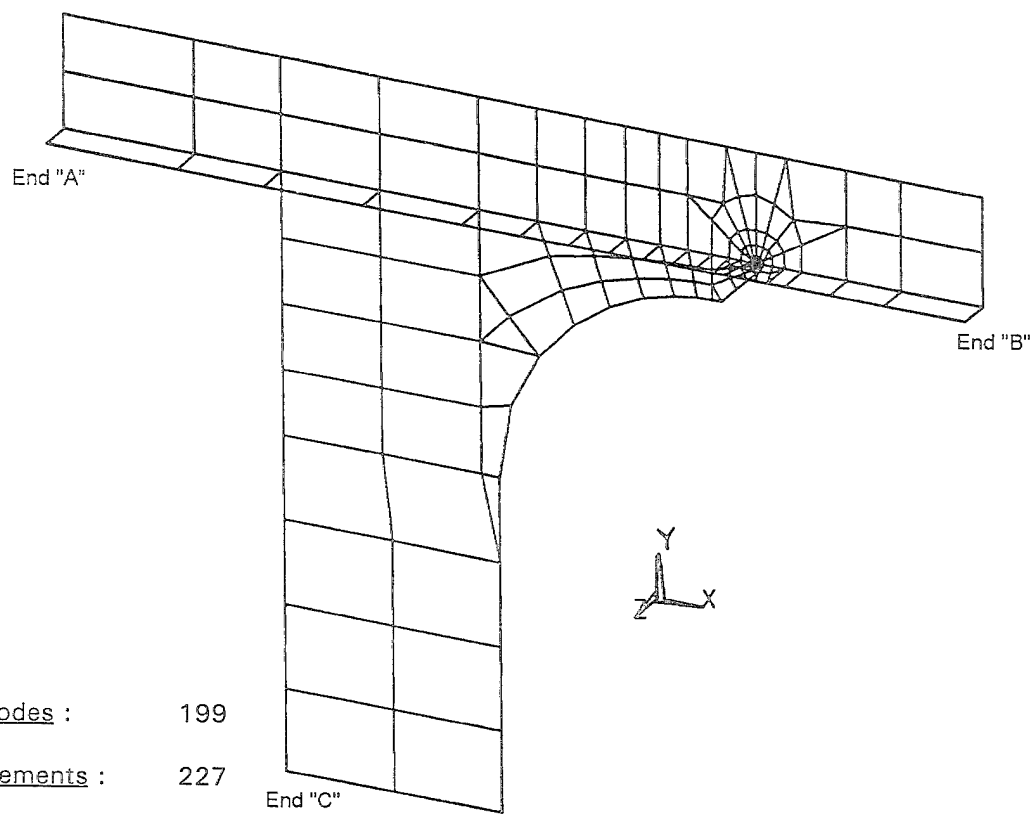

No. of Nodes : 199

No. of Elements : 227

Boundary Conditions :

Translation in Z direction restrained at nodes representing main deck and transverse bulkhead.

At end "A" of the model, all nodal degrees of freedom are fixed.

At end "B" of the model, a 1 mm displacement is applied in the positive X direction and all other nodal degrees of freedom are fixed.

At end "C" of the model, a 0.5 mm displacement is applied in the negative X direction and the vertical displacement in the Y direction is constrained to zero.

Benchmark No. : BM-5	Benchmark Title : Bracket Detail

Plot showing Critical Element Locations at Toe of Bracket :

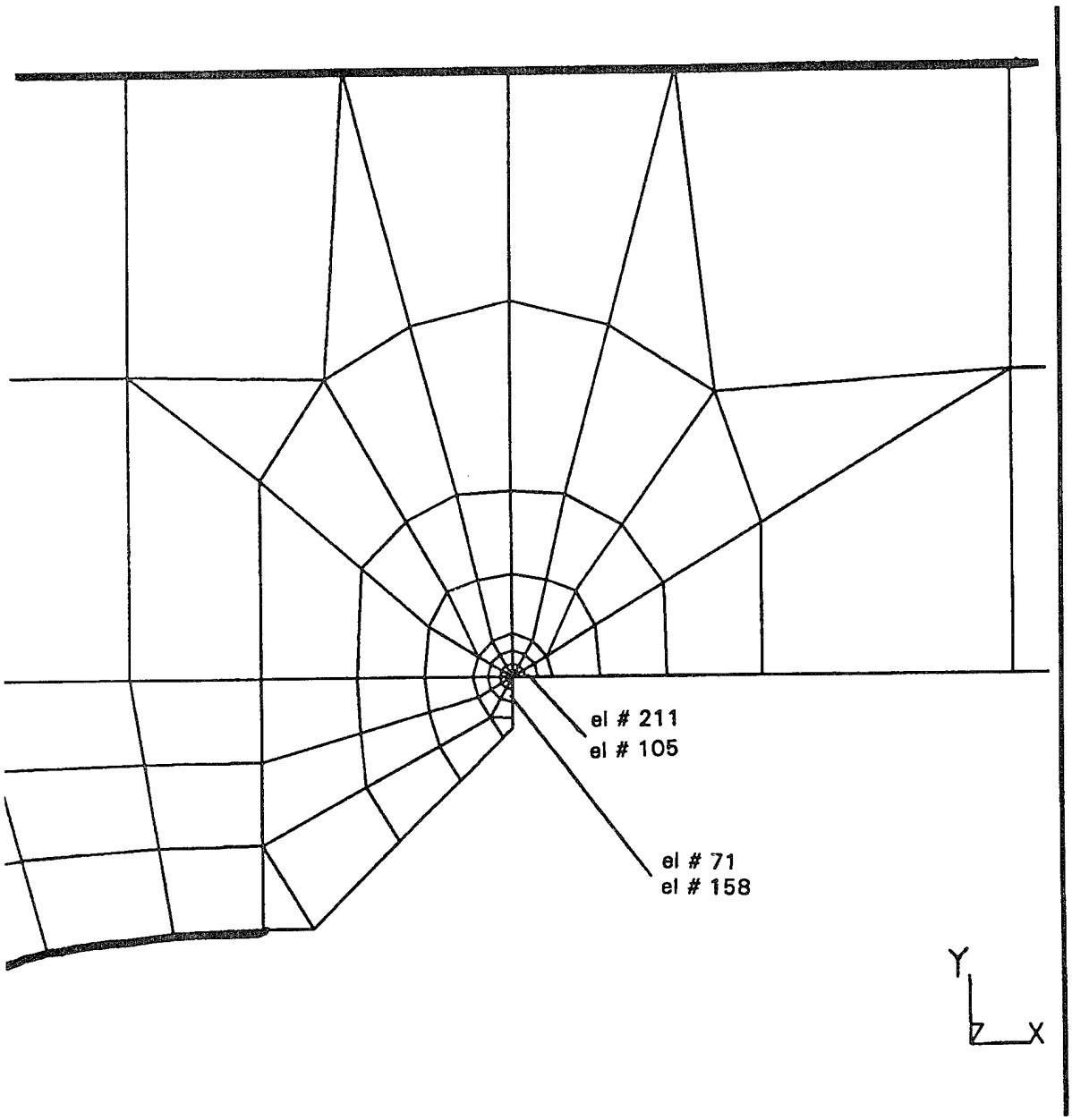

Benchmark No. : BM-5	Benchmark Title : Bracket Detail			
Finite Element Software Results	**ANSYS 5.1**	**MSC / NASTRAN Windows 1**	**ALGOR**	**Converged Solution [1] (ANSYS 5.1)**
Element Types :	SHELL43 LINK8	CQUAD4 CROD	*NA	SHELL93 LINK8
Plate Element Stresses σ_{eqv} [2] (MPa)				
1. Bracket (el # 71)	209.3	209.6	-	203.5
2. Deck Long. Web (el # 105)	248.9	247.6	-	243.4
Edge Element Stresses σ_a (MPa)				
1. Bracket (el # 158)	119.8	121.5	-	133.0
2. Deck Long. Web (el # 211)	235.5	236.0	-	240.1
Maximum Deflections (mm)				
Ux (node # 86)	1.000	1.000	-	1.000
Uy (node #185)	-0.339	-0.336	-	-0.348
Uz (node #106)	-0.366	-0.354	-	-0.388
Reaction Forces at A : (N)				
Fx	-1194400	-1194700	-	-1191800
Fy	-28343	-28302	-	-26414
Fz	5967	6019	-	-5064

* ALGOR does not provide a thick shell element with transverse shear.

1. The "converged solution" results were obtained using a refined mesh model with 8-node shell elements on ANSYS 5.1. The von Mises Stress contours of the toe of the bracket for the converged model are shown on Page D-31. The stress contours are in units of MPa (N/mm^2).

2. This particular bracket detail problem is complicated by the existence of a stress singularity at the end corner or toe of the bracket. In a linear elastic analysis, the stress at this point is theoretically infinite. Refining the finite element mesh gives progressively higher stresses which are meaningless. One method which is commonly used to get around this problem is to use the so called "hot spot" stress. In calculating the hot spot stress no account is taken of the weld geometry, and in an idealised finite element representation (ignoring the weld), the stress is equal to the value at about one plate thickness from the corner (Chalmers, 1993). In this benchmark, the hot spot stress is calculated two ways :

   a) Using element centroidal von Mises stresses at the elements 10 mm from the corner (elements 71 and 105, see figure on Page D-29); and
   b) Using line element stresses at 10 mm from the corner (elements 158 and 211).

   The advantage of these methods are that they do not rely on the techniques used to extrapolate stresses to the node points which may vary for different FEA programs.

Benchmark No. :	BM-5	Benchmark Title :	Bracket Detail

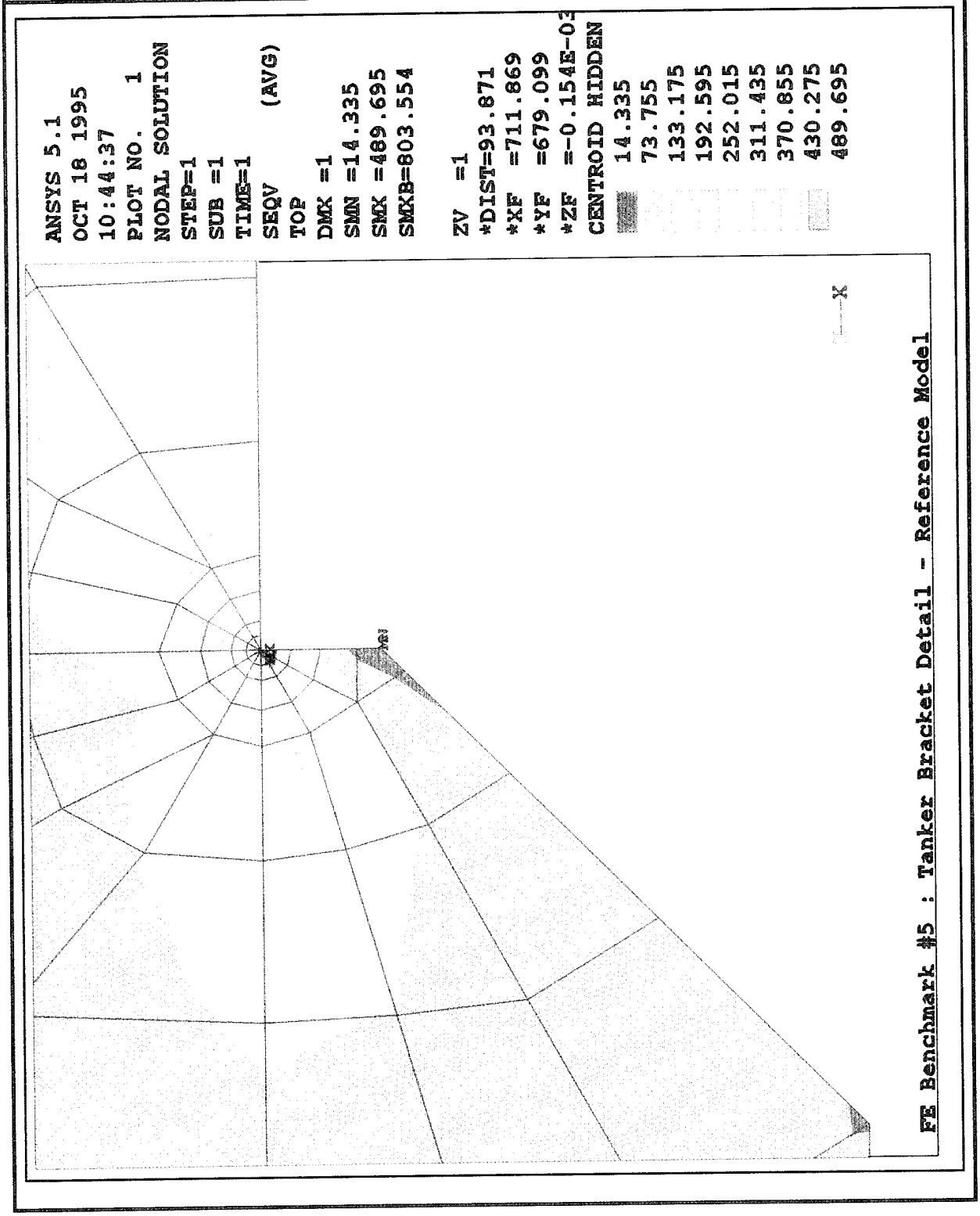

Project Technical Committee Members

The following persons were members of the committee that represented the Ship Structure Committee to the Contractor as resident subject matter experts. As such they performed technical review of the initial proposals to select the contractor, advised the contractor in cognizant matters pertaining to the contract of which the agencies were aware, and performed technical review of the work in progress and edited the final report.

Chairman

LCDR Stephen Gibson	National Defence Headquarters, CANADA

Members

Mr. Rickard Anderson	Military Sealift Command
Mr. Richard Sonnenschein	Maritime Administration
LT Pat Little	U.S. Coast Guard
Mr. James White	U.S. Coast Guard
Mr. Natale Nappi	Naval Sea Systems Command
Mr. John Adamchek	Carderock Division Naval Surface Warfare Center
Mr. Gary Horn	American Bureau of Shipping
Mr. Tom Ingram	American Bureau of Shipping
Stephen Yang	Defence Research Establishment Atlantic
Mr. William Siekierka	Naval Sea Systems Command, Contracting Officer's Techical Representative
Dr. Robert Sielski	National Academy of Science, Marine Board Liaison
CDR Steve Sharpe	U.S. Coast Guard, Executive Director Ship Structure Committee

COMMITTEE ON MARINE STRUCTURES

Commission on Engineering and Technical Systems

National Academy of Sciences – National Research Council

The COMMITTEE ON MARINE STRUCTURES has technical cognizance over the interagency Ship Structure Committee's research program.

John Landes, University of Tennessee, Knoxville, TN
Howard M. Bunch, University of Michigan, Ann Arbor, MI
Bruce G. Collipp, Marine Engineering Consultant, Houston, TX
Dale G. Karr, University of Michigan, Ann Arbor, MI
Andrew Kendrick, NKF Services, Montreal, Quebec
John Niedzwecki, Texas A & M University, College Station, TX
Barbara A. Shaw, Chairman, Pennsylvania State University, University Park, PA
Robert Sielski, National Research Council, Washington, DC
Stephen E. Sharpe, Ship Structure Committee, Washington, DC

DESIGN WORK GROUP

John Niedzwecki, Chairman, Texas A&M University, College Station, TX
Bilal Ayyub, University of Maryland, College Park, MD
Ovide J. Davis, Pascagoula, MS
Maria Celia Ximenes, Chevron Shipping Co., San Francisco, CA

MATERIALS WORK GROUP

Barbara A. Shaw, Chairman, Pennsylvania State University, University Park, PA
David P. Edmonds, Edison Welding Institute, Columbus, OH
John F. McIntyre, Advanced Polymer Sciences, Avon, OH
Harold S. Reemsnyder, Bethlehem Steel Corp., Bethlehem, PA
Bruce R. Somers, Lehigh University, Bethlehem, PA

RECENT SHIP STRUCTURE COMMITTEE PUBLICATIONS

Ship Structure Committee Publications – A Special Bibliography This bibliography of SSC reports may be downloaded from the internet at: http://www.starsoftware.com/uscgnmc/nmc/ssc1/index.htm

SSC-386 Ship's Maintenance Project R. Bea, E. Cramer, R. Schulte-Strauthaus, R. Mayoss, K. Gallion, K. Ma, R. Holzman, L. Demsetz 1995

SSC-385 Hydrodynamic Impact on Displacement Ship Hulls – An Assessment of the State of the Art J. Daidola, V. Mishkevich 1995

SSC-384 Post-Yield Strength of Icebreaking Ship Structural Members C. DesRochers, J. Crocker, R. Kumar, D. Brennan, B. Dick, S. Lantos 1995

SSC-383 Optimum Weld-Metal Strength for High Strength Steel Structures R. Dexter and M. Ferrell 1995

SSC-382 Reexamination of Design Criteria for Stiffened Plate Panels by D. Ghose and N. Nappi 1995

SSC-381 Residual Strength of Damaged Marine Structures by C. Wiernicki, D. Ghose, N. Nappi 1995

SSC-380 Ship Structural Integrity Information System by R. Schulte-Strathaus, B. Bea 1995

SSC-379 Improved Ship Hull Structural Details Relative to Fatigue by K. Stambaugh, F. Lawrence and S. Dimitriakis 1994

SSC-378 The Role of Human Error in Design, Construction and Reliability of Marine Structures by R. Bea 1994

SSC-377 Hull Structural Concepts For Improved Producibility by J. Daidola, J. Parente, and W. Robinson 1994

SSC-376 Ice Load Impact Study on the NSF R/V Nathanial B. Palmer by J. St. John and P. Minnick 1995

SSC-375 Uncertainty in Strength Models for Marine Structures by O. Hughes, E. Nikolaidis, B. Ayyub, G. White, P. Hess 1994

SSC-374 Effect of High Strength Steels on Strength Considerations of Design and Construction Details of Ships by R. Heyburn and D. Riker 1994

SSC-373 Loads and Load Combinations by A. Mansour and A. Thayamballi 1994

SSC-372 Maintenance of Marine Structures: A State of the Art Summary by S. Hutchinson and R. Bea 1993

SSC-371 Establishment of a Uniform Format for Data Reporting of Structural Material Properties for Reliability Analysis by N. Pussegoda, L. Malik, and A. Dinovitzer 1993

SSC-370 Underwater Repair Procedures for Ship Hulls (Fatigue and Ductility of Underwater Wet Welds) by K. Grubbs and C. Zanis 1993